THROTTLE VALVE AND THROTTLE WITH CHECK VALVE

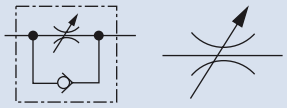

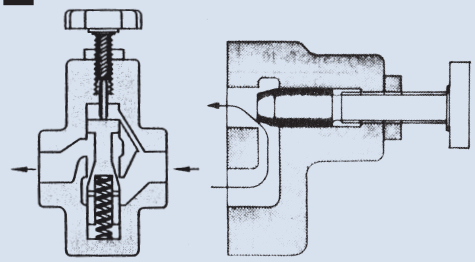

B

How to order

SR C G - 03

1 2 3 4

1	Model
2	With check
3	Mounting type G: Sub-plate mounting T: Thread connection
4	Valve size 03: 3/8" 04: 1/2" 06: 3/4" 10: 1-1/4"

Specifications

Model		Pressure Adj. Range (bar)	Max. Flow (lpm)	Weight (kg)	
Sub-Plate Mounting	Thread Connection			SRG, SRCG	SRT, SRCT
SRG-03 / SRCG-03	SRT-03,04 / SRCT-03, 04	250	30	1.2 / 2.1	1.1 / 1.2
SRG-06 / SRCG-06	SRT-06 / SRCT-06		80	2.4 / 4.0	2.3 / 3.2
SRG-10 / SRCG-10	SRT-10 / SRCT-10		200	4.9 / 8.1	5.8 / 7.2

Dimensions

Unit: mm

SRT-03, 04, 06, 10

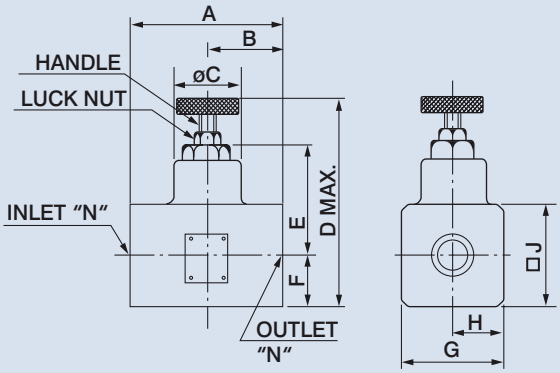

SRCT-03, 04, 06, 10

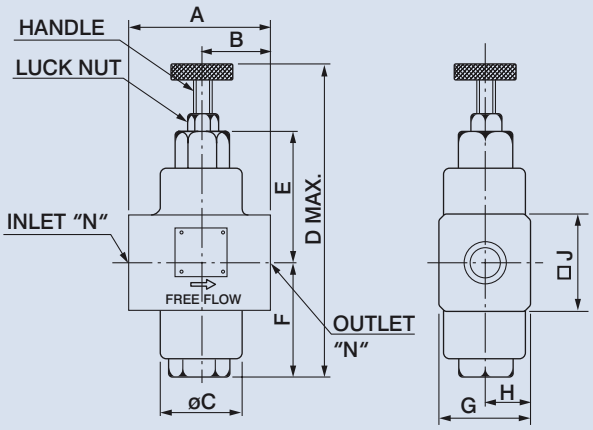

Model	A	B	C	D	E	F	G	H	J	K	L	N
SRT-03, 04	70	35	40	116	54	23	42	20	40	8	19	3/8, 1/2
SRT-06	100	50	40	136.5	62	30	62	30	60	8	19	3/4
SRT-10	130	65	56	173	73	40	82	40	80	10	22	1-1/4
SRCT-03, 04	70	35	40	151	60	58	42	20	40	8	19	3/8, 1/2
SRCT-06	100	50	56	186	83	65	62	30	60	8	19	3/4
SRCT-10	130	65	70	228	106	77	82	40	80	10	22	1-1/4

THROTTLE VALVE AND THROTTLE WITH CHECK VALVE

B

Dimensions

SRG-03, 06, 10

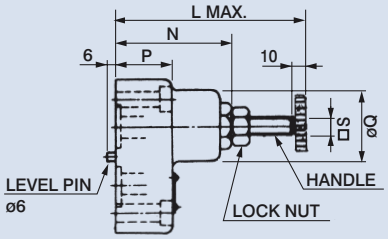

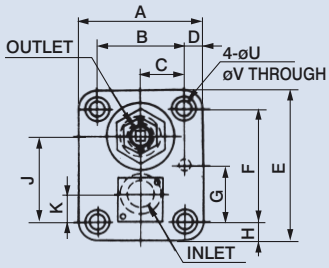

Unit: mm

Model	A	B	C	D	E	F	G	H	J	K	L	N	P	Q	S	U	V
SRG-03	60	40	20	10	80	60	30	10	45	15	100	61	30	40	8	14	8.8
SRG-06	80	58	29	11	92	70	35	11	54	16	117.5	73	42	40	8	17.5	11
SRG-10	100	72	36	14	120	92	46	14	71	21	145	93	55	56	10	21	13.5

SRCG-03, 06, 10

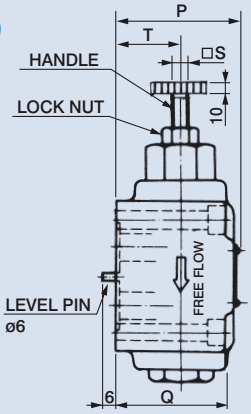

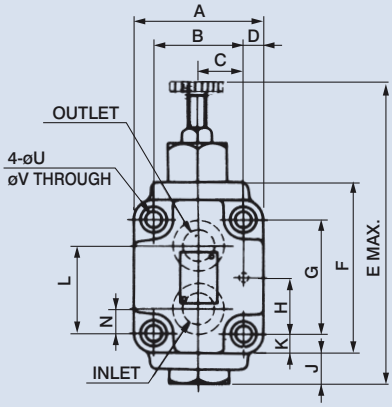

Model	A	B	C	D	E	F	G	H	J	K	L	N	P	Q	S	T	U	V
SRCG-03	60	40	20	10	151	80	60	30	28	10	45	15	62	55	8	35	14	8.8
SRCG-06	80	58	29	11	186	92	70	35	30	11	54	16	74	68	8	40	17.5	11
SRCG-10	100	72	36	14	228	120	92	46	31	14	71	21	97	82	10	50	21	13.5

Subplate SRGM-03

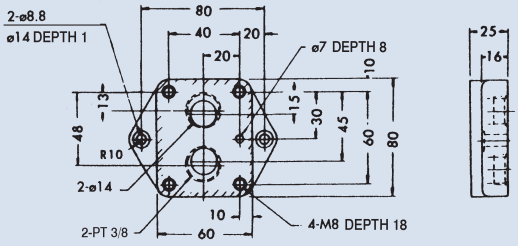

Subplate SRGM-10

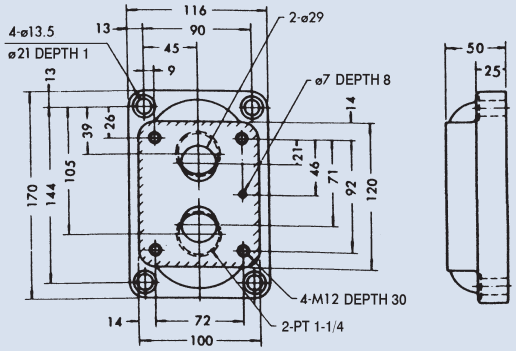

Subplate SRGM-06

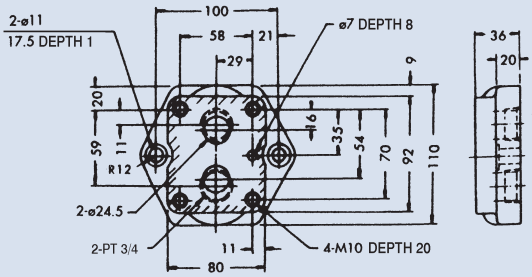

FLOW CONTROL VALVE-PRESSURE AND TEMPERATURE COMPENSATED

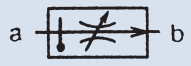

FG

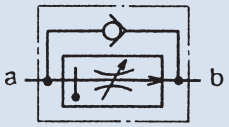

FCG

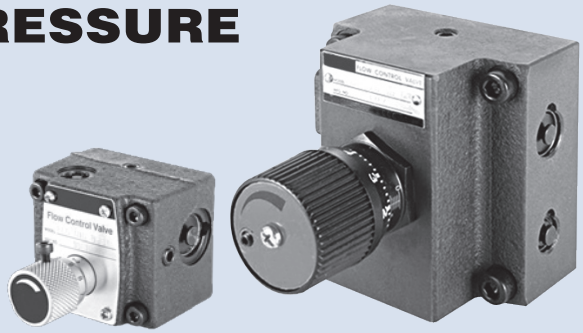

B

How to order

FG
FCG - 02 - 30 - N - 50
1 2 3 4 5

1	Model	FG: Without check FCG: With check
2	Valve size	01, 02
3	Max. flow	01: 8 lpm 02: 30 lpm
4	N: Pressure conpensation-fine adjustable	OMIT: None
5	Design No.	50: Scaled adjusting knob

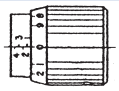

Specifications

Model	Max. Pressure (bar)	Max. Flow (lpm)	Flow Adj. Range (lpm)	Port a	Port b	Weight (kg)
FG-01-8-※	160	8	0.02~8	Oil inlet	Controlled oil outlet	1.4
FCG-01-8-※				Oil inlet or free flow outlet	Free flow inlet or controlled oil outlet	
FG-02-30-※	210	30	0.05~30	Oil inlet	Controlled oil outlet	4.1
FCG-02-30-※				Oil inlet or free flow outlet	Free flow inlet or controlled oil outlet	

Dimensions

Unit: mm

Mounting Bolt

Model	Hexagon	PCS
FG, FCG-01	M5 x 55 L	4
FG, FCG-02	M8 x 50 L	4

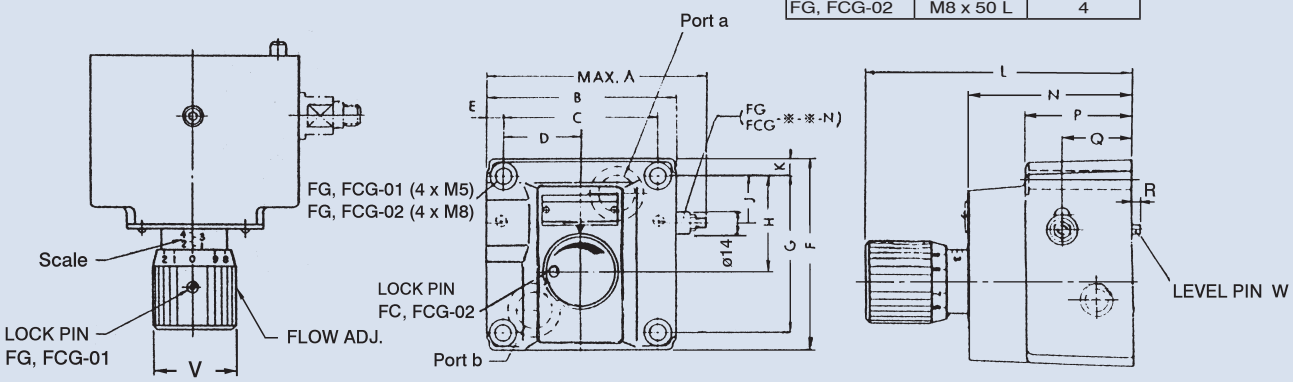

Model	A	B	C	D	E	F	G	H	J	K	L	N	P	Q	R	V	W
FG, FCG-01	81.5	66	51	22.5	7.5	58	43	31	16.5	7.5	84	53.5	45	17	5	22.5	ø4 x 1
FG, FCG-02	116	96	76.2	38.1	9.9	104.5	82.6	44.3	24	9.9	123	69	40	23	6	46	ø6 x 1

DECELERATION VALVE

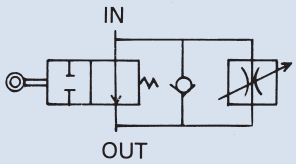

B

How to order

FKC - G - 2 - 02
1 2 3 4

1	Model
2	Mounting type G: Sub-plate mounting
3	Flow adjusting range (lpm) 1: 0.1~1 2: 0.1~2 4: 0.1~4
4	Valve size 1/4"

Specifications

Model	Connection Port (pt)	Flow Adj. Range (lpm)	Free Flow (lpm)	Max. Operating Pressure (bar)	Weight (kg)
FKC-G-1-02	1/4	0.1~1	20	70	1.1
FKC-G-2-02		0.1~2			
FKC-G-4-02		0.1~4			

Dimensions

Unit: mm

SUBPLATE

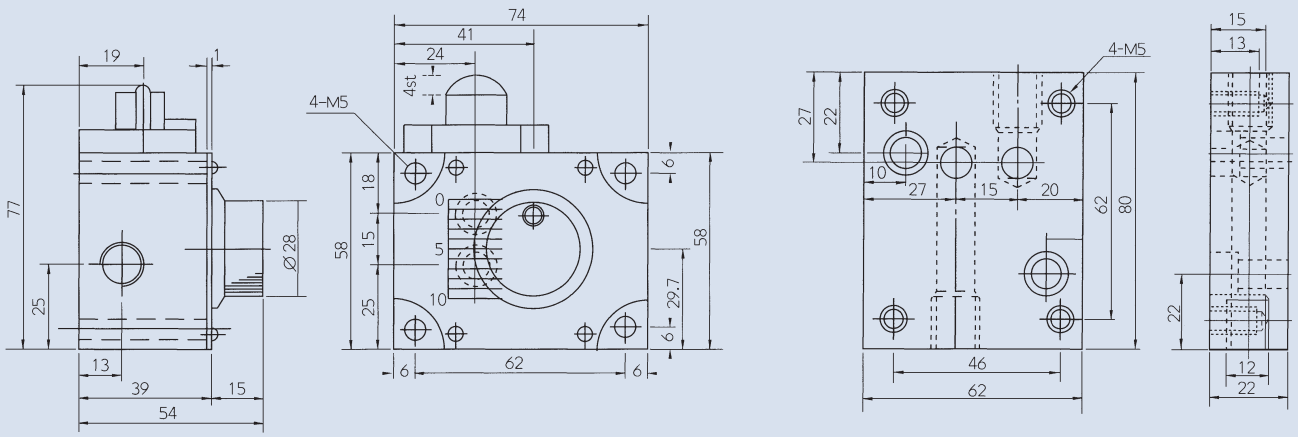

DECELERATION VALVE

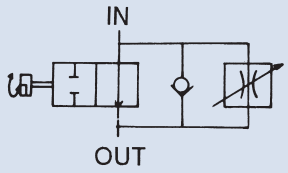

B

How to order

FKC - G - 2 - 02 A※

1 2 3 4 5

1	Model
2	Mounting type G: Sub-plate mounting
3	Flow adjusting range
4	Valve size 02: 1/4" 03: 3/8"
5	Valve type, port position, cam's notch position

Model	In-Out port position
FKC-G-※-02A (AL)	Left-Hand side
FKC-G-※-03 ARI	Right-Hand side
FKC-G-※-03 ALI	Left-Hand side

FKC-G-※-02-※

FKC-G-※-03-※

Specifications

Model	Connection Port (pt)	Flow Adj. Range (lpm)	Free Flow (lpm)	Max. Operating Pressure (bar)	Weight (kg)
FKC-G-1-02A	1/4"	0.1~1	20	70	1.16
FKC-G-2-02A		0.1~2			
FKC-G-4-02A		0.1~4			
FKC-G-2-03A	3/8"	0.1~2	30		1.96
FKC-G-4-03A		0.1~4			
FKC-G-8-03A		0.1~8			

Dimensions

Unit: mm

FKC-G02-02A(AL)

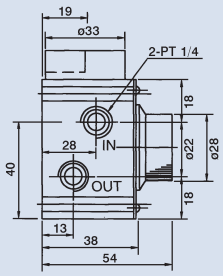

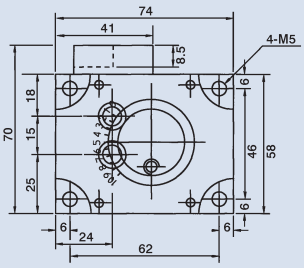

FKC-G03-03ARI

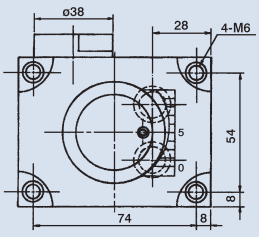

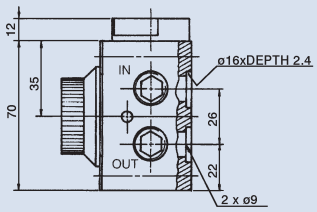

DECELERATION VALVE

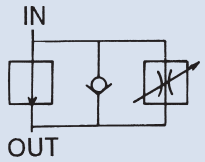

B

How to order

FKC - G - 2 - 02 B

1 2 3 4 5

1	Model
2	Mounting type G: Sub-plate mounting
3	Flow adjusting range
4	Valve size 02: 1/4" 03: 3/8"
5	Valve type

Specifications

Model	Connection Port (pt)	Flow Adj. Range (lpm)	Free Flow (lpm)	Max. Operating Pressure (bar)	Weight (kg)
FKC-G-1-02B	1/4"	0.1~1	20	70	1
FKC-G-2-02B		0.1~2			
FKC-G-4-02B		0.1~4			
FKC-G-2-03B	3/8"	0.1~2	30		1.9
FKC-G-4-03B		0.1~4			
FKC-G-8-03B		0.1~8			

Dimensions

Unit: mm

FKC-G02-02B

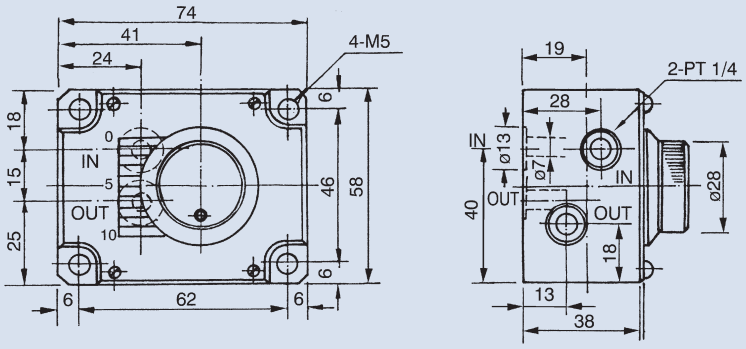

FKC-G03-03B

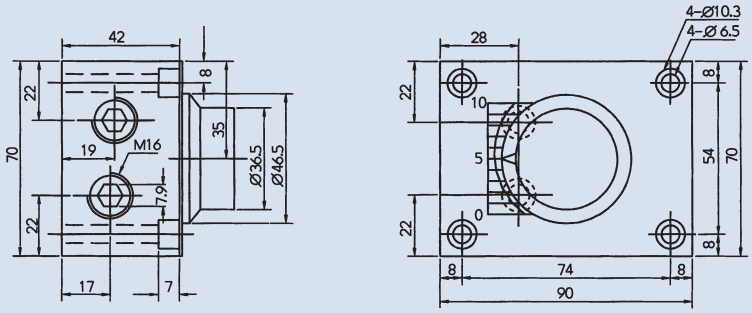

DOUBLE DECELERATION VALVE

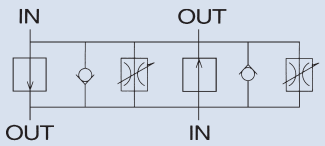

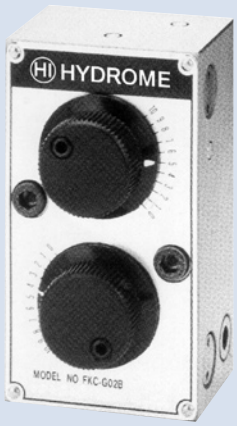

B

How to order

FKC - G - 2 - 02 B 2

1 2 3 4 5 6

1	Model
2	Mounting type G: Sub-plate mounting
3	Flow adjusting range (lpm) 1: 0.1~1 2: 0.1~2 4: 0.1~4
4	Valve size 1/4"
5	Valve type
6	Double type

Specifications

Model	Connection Port (pt)	Flow Adj. Range (lpm)	Free Flow (lpm)	Max. Operating Pressure (bar)	Weight (kg)
FKC-G-1-02B2	1/4"	0.1~1	20	70	1.32
FKC-G-2-02B2		0.1~2			
FKC-G-4-02B2		0.1~4			

Dimensions

Unit: mm

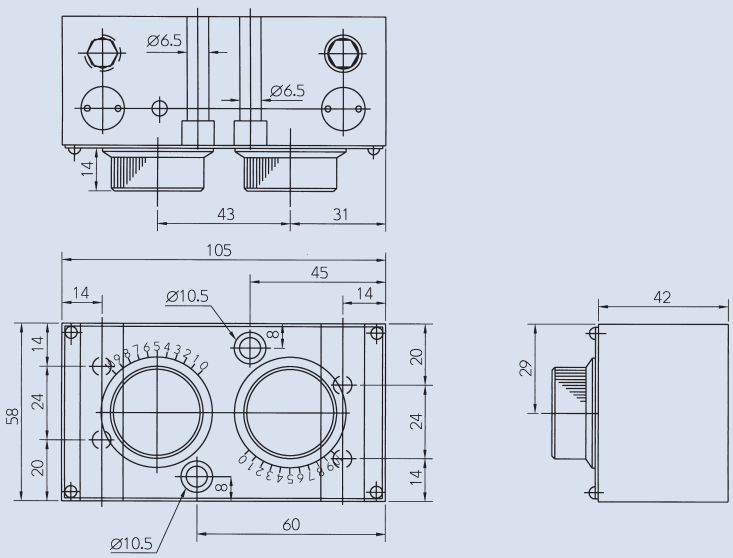

DECELERATION VALVE

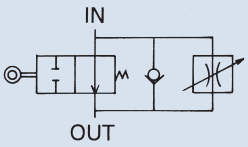

B

How to order

FPR-MGK - 8 - 03

1 2 3

1	Model	Sub-plate mounting
2	Flow adjusting range (lpm)	2: 0.1~2 4: 0.1~4 8: 0.1~8 12: 0.1~12
3	Valve size	3/8"

Specifications

Model	Connection Port (pt)	Flow Adj. Range (lpm)	Free Flow (lpm)	Max. Operating Pressure (bar)	Weight (kg)
FPR-MGK-2-03	3/8"	0.1~2	30	70	2.16
FPR-MGK-4-03		0.1~4			2.16
FPR-MGK-8-03		0.1~8			2.16
FPR-MGK-12-03		0.1~12			2.16

Dimensions

Unit: mm

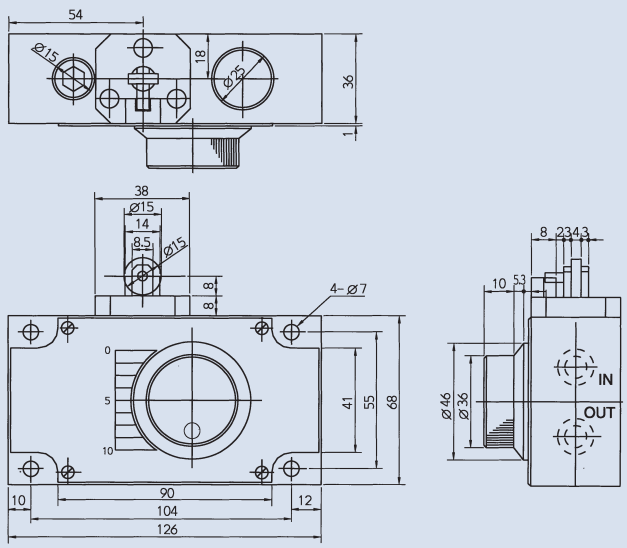

SUBPLATE

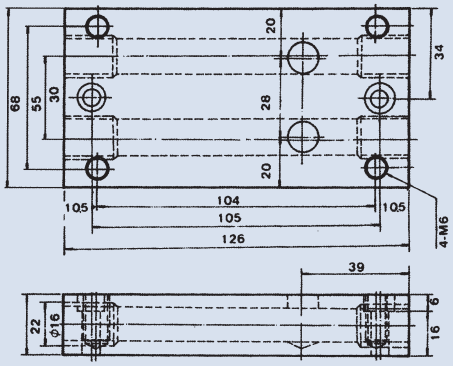

DECELERATION VALVE

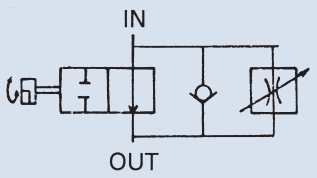

B

How to order

FPR-MGK - 8 - 03 AR

1 2 3 4

1	Model Sub-plate mounting
2	Flow adjusting range (lpm) 2: 0.1~2 4: 0.1~4 8: 0.1~8 12: 0.1~12
3	Valve size 3/8"
4	Valve type

Specifications

Model	Connection Port (pt)	Flow Adj. Range (lpm)	Free Flow (lpm)	Max. Operating Pressure (bar)	Weight (kg)
FPR-MGK-2-03AR	3/8"	0.1~2	30	70	2.21
FPR-MGK-4-03AR		0.1~4			2.21
FPR-MGK-8-03AR		0.1~8			2.21
FPR-MGK-12-03AR		0.1~12			2.21

Dimensions

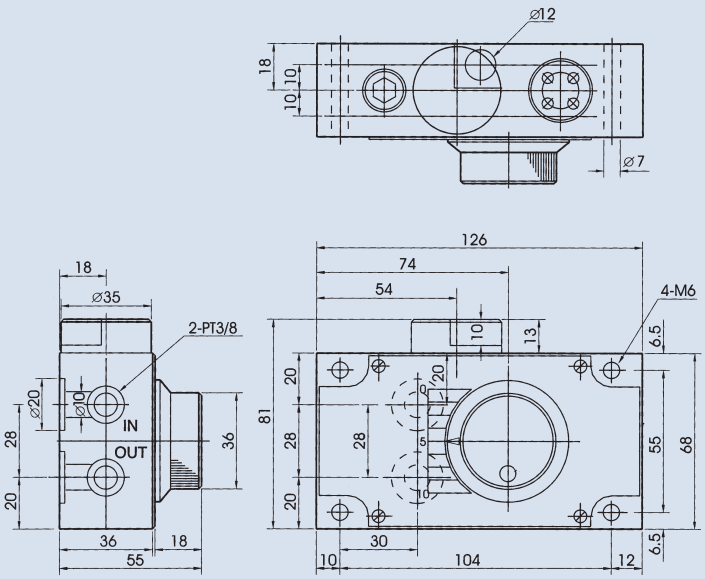

SUBPLATE

Unit: mm

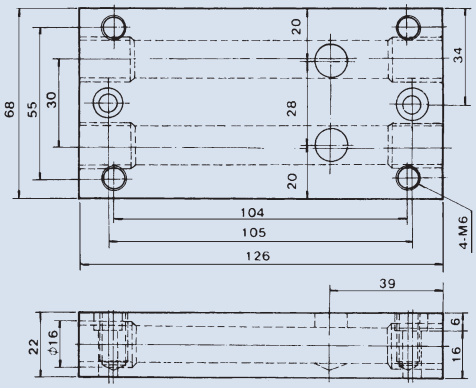

DECELERATION VALVE

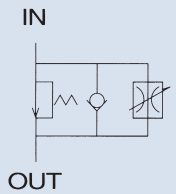

B

How to order

FPR-MGK - 8 - 03 B

1 2 3 4

1	Model Sub-plate mounting
2	Flow adjusting range (lpm) 2: 0.1~2 4: 0.1~4 8: 0.1~8 12: 0.1~12
3	Valve size 3/8"
4	Valve type

Specifications

Model	Connection Port (pt)	Flow Adj. Range (lpm)	Free Flow (lpm)	Max. Operating Pressure (bar)	Weight (kg)
FPR-MGK-2-03B	3/8"	0.1~2	30	70	2.16
FPR-MGK-4-03B		0.1~4			2.16
FPR-MGK-8-03B		0.1~8			2.16
FPR-MGK-12-03B		0.1~12			2.16

Dimensions

Unit: mm

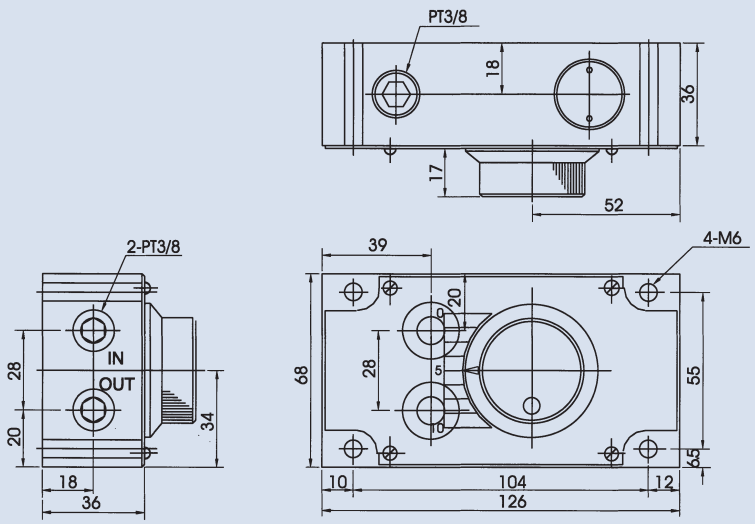

DECELERATION CHECK VALVE

NORMALLY OPEN

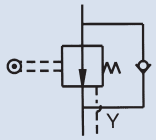

NORMALLY CLOSED

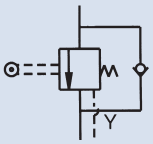

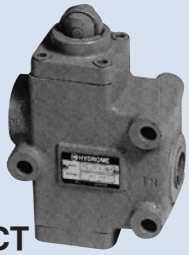

ZCT

ZCG

B

How to order

ZC - T 03 - ※

1 2 3 4

1	Model
2	Mounting type G: Sub-plate mounting T: Thread connection
3	Valve size 03: 3/8" 06: 3/4"
4	Omit: Normal open C: Normal closed

Specifications

Model		Max. Operating Pressure (bar)	Max. Flow (lpm)	Weight (kg)		Bolt size ZC-G※※
Sub-Plate Mounting	Thread Connection					
ZC-G03	ZC-T03	230	30	5.4	5	M8 x 75L
ZC-G06	ZC-T06		85	9	5.4	M10 x 100L

Dimensions

ZC-T03, 06

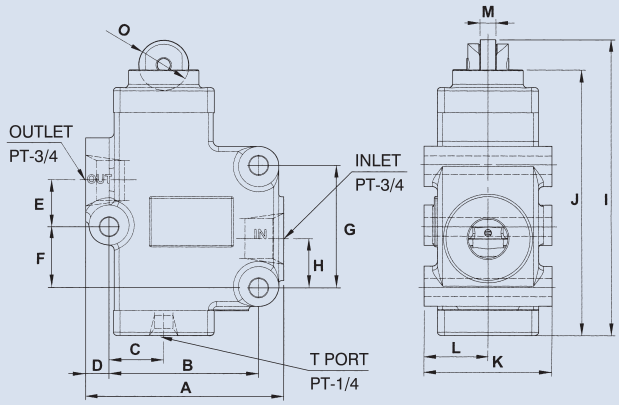

Model	A	B	C	D	E	F	G
ZC-T03	116	84	31	16	34	16	68
ZC-T06	118	90	33	13.5	28	35	73

Model	H	I	J	K	L	M	O
ZC-T03	26	161	144.5	68	34	8	27
ZC-T06	29	176.5	158.5	76	38	9.5	30

ZC-G06

Unit: mm

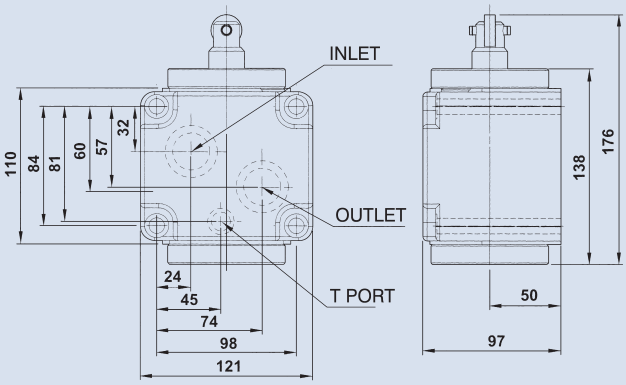

SOLENOID OPERATED DECELERATION VALVE

SINGLE TYPE

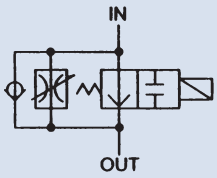

DUBLE TYPE

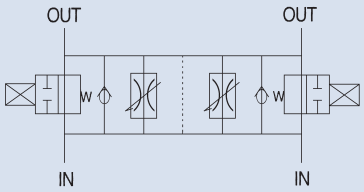

B

How to order

FKCS - 6 - 03 - S2 - ※

1 2 3 4 5

1	Model Sub-plate mounting
2	Flow adjusting range
3	Valve size 02: 1/4" 03: 3/8"
4	Omit: Single type S2: Double type
5	Voltage A1: AC110V (60HZ) A2: AC220V (60HZ) A3: AC110V (50HZ) A4: AC220V (50HZ) D1: DC12V D2: DC24V

Specifications

Model	Flow Adj. Range (lpm)		Free Flow (lpm)	Max. Operating Pressure (bar)	Weight (kg)
	1 st feed	2nd feed			
FKCS-4-03S2	0.1~4	0.1~2	30	70	8.52
FKCS-6-03S2	0.1~6	0.1~4			
FKCS-2-03	0.1~2				2.84
FKCS-4-03	0.1~4				
FKCS-6-03	0.1~6				
FKCS-2-02	0.1~2		20		1.9
FKCS-4-02	0.1~4				
FKCS-6-02	0.1~6				

Dimensions

Unit: mm

FKCS-※-02

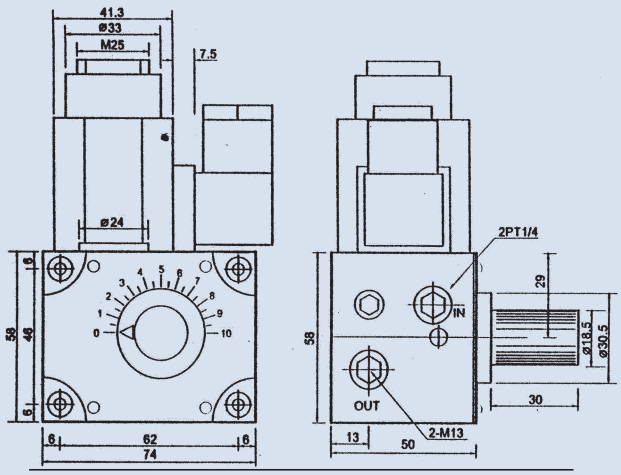

FKCS-※-03-S2

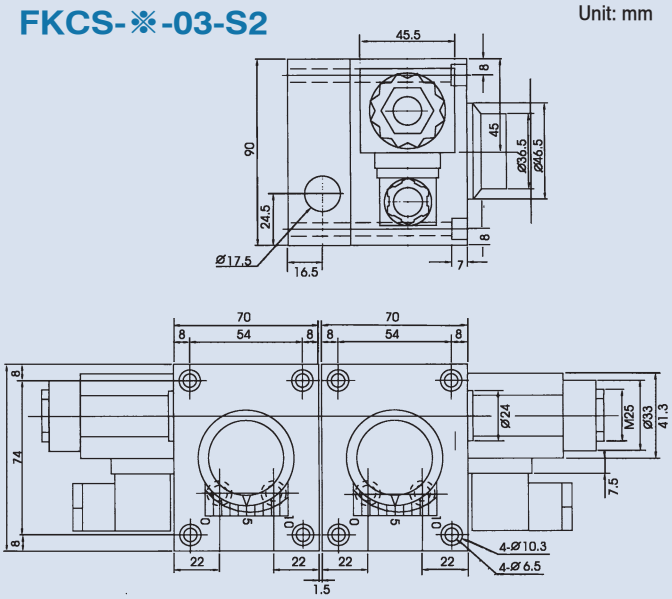

SOLENOID OPERATED DECELERATION VALVE

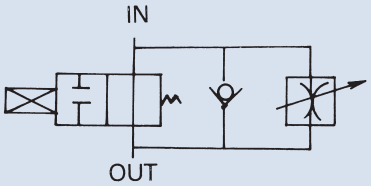

B

How to order

FPR-MGKS - 8 - 03 - ※

1 2 3 4

1	Model Sub-plate mounting
2	Flow adjusting range (lpm) 2: 0.1~2 4: 0.1~4 8: 0.1~8 12: 0.1~12
3	Valve size 3/8"
4	Voltage A1: AC110V (60HZ) A2: AC220V (60HZ) A3: AC110V (50HZ) A4: AC220V (50HZ) D1: DC12V D2: DC24V

Specifications

Model	Flow Adj. Range (lpm)	Free Flow (lpm)	Max. Operating Pressure (bar)	Weight (kg)
FPR-MGKS-2-03	0.1~2	30~60	70~140	3.2
FPR-MGKS-4-03	0.1~4			3.2
FPR-MGKS-8-03	0.1~8			3.2
FPR-MGKS-12-03	0.1~12			3.2

Dimensions

Unit: mm

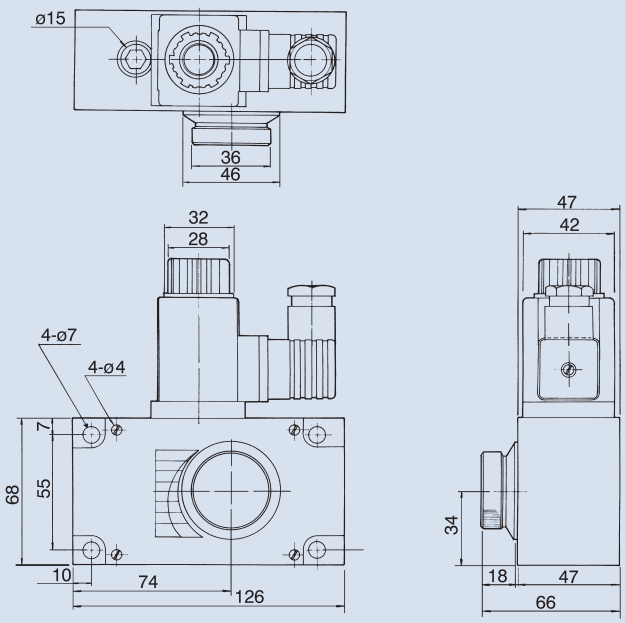

FLOW CONTROL VALVE

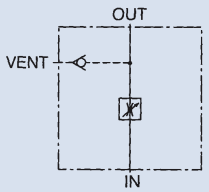

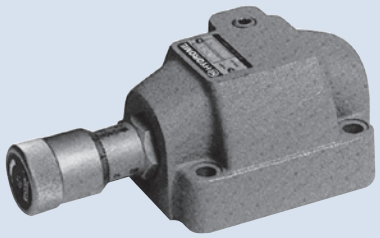

B

How to order

THF - G 06
1 2 3

1	Model
2	Mounting type G: Sub-plate mounting
3	Valve size 06: 3/4" 10: 1-1/4"

Specifications

Model	Max. Operating Pressure (bar)	Max. Flow (lpm)	Weight (kg)	Bolt size
THF-G06	250	125	5.5	M10 x 45L
THF-G10		240	8.4	M12 x 45L

Dimensions

Unit: mm

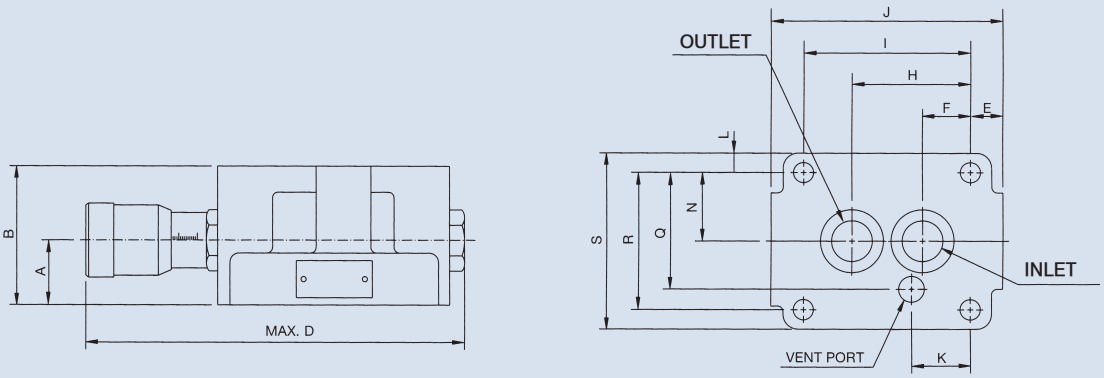

Model	A	B	C	D	E	F	H	I	J	K	L	N	Q	R	S
THF-G06	35	75	ø26	209	17.5	26	64	90	125	31.7	10.5	37	63	74	95
THF-G10	40	86	ø29	248	19	34	78	112	150	37.9	14.5	43	76	86	115

SOLENOID OPERATED FLOW CONTROL VALVE

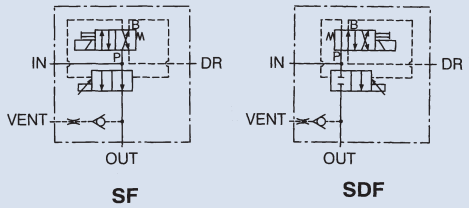

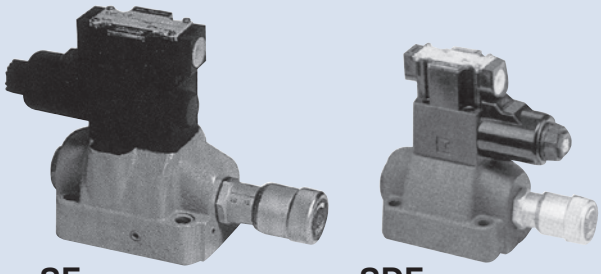

B

How to order

SF, SDF - 06
1 2

1	Model
2	Valve size 03: 3/8" 06: 3/4" 10: 1-1/4"

Specifications

Model	Max. Operating Pressure (bar)	Max. Flow (lpm)	Weight (kg)	Bolt size
SF-03	250	120	2.9	M6 x 65L
SF-06		150	5.7	M10 x 45L
SF-10		240	8.7	M12 x 55L
SDF-03		120	2.9	M6 x 65L
SDF-06		150	5.7	M10 x 45L
SDF-10		240	8.7	M12 x 55L

Dimensions

Unit: mm

SF

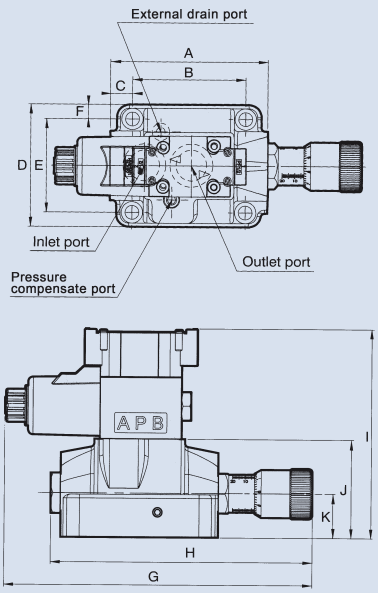

Model	A	B	C	D	E	F	G	H	I	J	K
SF-03	108	60	24	70	40	15	237	168	149	62	31
SF-06	125	90	17.5	97	74	11.5	245	208	166	78	35
SF-10	150	112	19	116	86	15	281	246	176	88	42

SDF

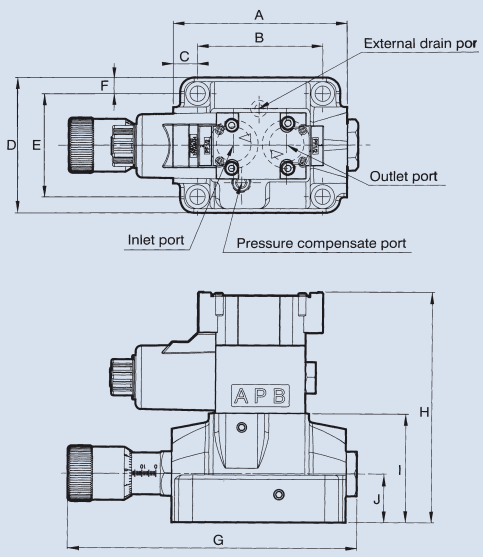

Model	A	B	C	D	E	F	G	H	I	J
SDF-03	108	60	24	70	40	15	168	149	62	31
SDF-06	125	90	17.5	97	74	11.5	208	166	78	35
SDF-10	150	112	19	116	86	15	246	176	88	42

SOLENOID OPERATED FLOW CONTROL VALVE

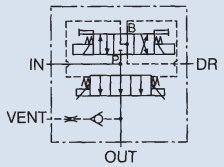

SKFG

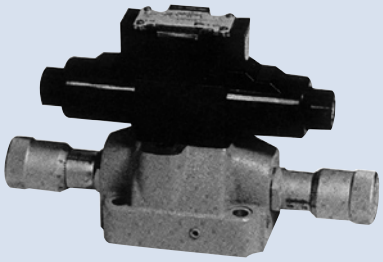

B

How to order

SKFG - 06

1 2

1	Model
2	Valve size 06: 3/4" 10: 1-1/4"

Specifications

Model	Max. Operating Pressure (bar)	Max. Flow (lpm)	Weight (kg)	Bolt size
SKFG-06	230	125	7.2	M10 x 45L
SKFG-10		240	11	M12 x 55L

Dimensions

Unit: mm

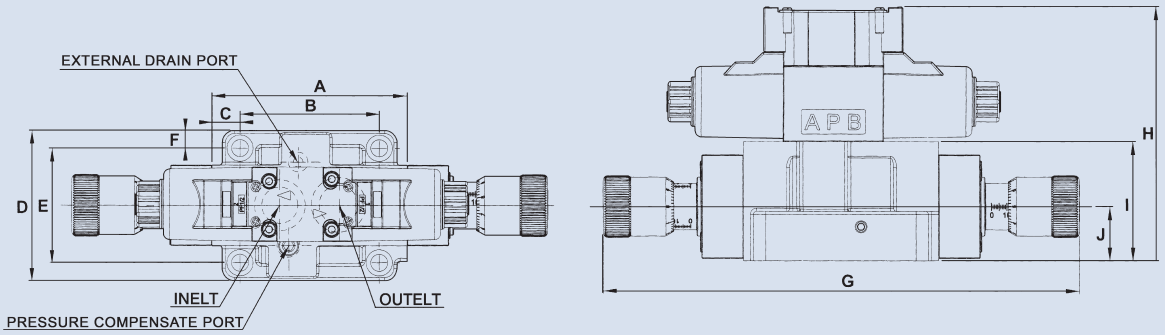

Model	A	B	C	D	E	F	G	H	I	J
SKFG-06	126	90	18	97	74	11.5	308	164	77	35
SKFG-10	150	112	19	116	86	15	406	175	88	42