GEAR PUMP

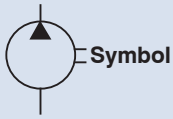

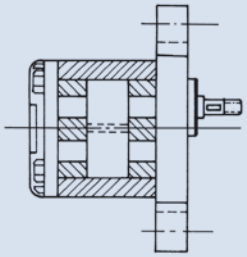

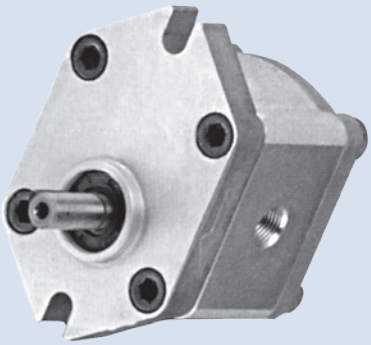

D

How to order

HGP - 05A - F - ※ - R - X
1 2 3 4 5 6

1	Model
2	Series number
3	Mouning type F: Flange mounting L: Foot mounting
4	Displacement cc/rev
5	Rotation R: Clockwise L: Counter-clockwise
6	Shaft type X: Straight shaft

Specifications

Model	Displacement (cc/rev)	Pressure bar (psi)		Runing Speed (rpm)			Port Size		Weigth (kg)
		Working	Max.	Rate	Max.	Min.	Inlet	Outlet	
HGP-05A-※03※	0.35	210 (3000)	250 (3500)	1800	3500	800	1/8"	1/8"	0.40
HGP-05A-※05※	0.56								0.42
HGP-05A-※08※	0.85						1/4"	1/4"	0.43
HGP-05A-※1.1※	1.13								0.44

Dimensions

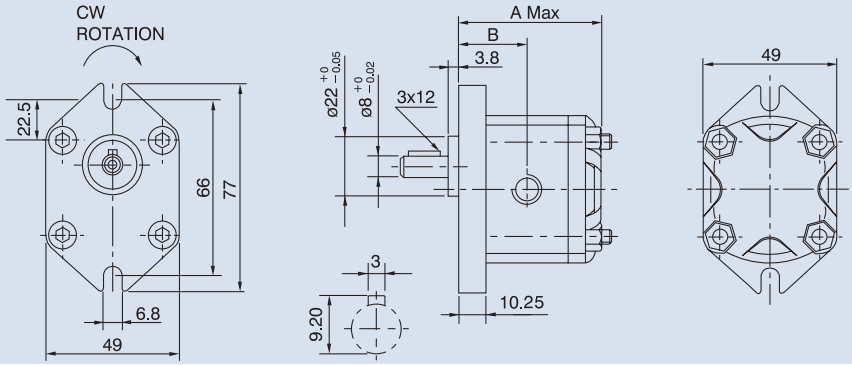

Unit:mm

Model	Dimension A
HGP-05A-*03*	52
HGP-05A-*05*	54
HGP-05A-*08*	56
HGP-05A-*1.1*	58

Model	Dimension B
HGP-05A-*03*	25
HGP-05A-*05*	26
HGP-05A-*08*	27
HGP-05A-*1.1*	28

Performance curves

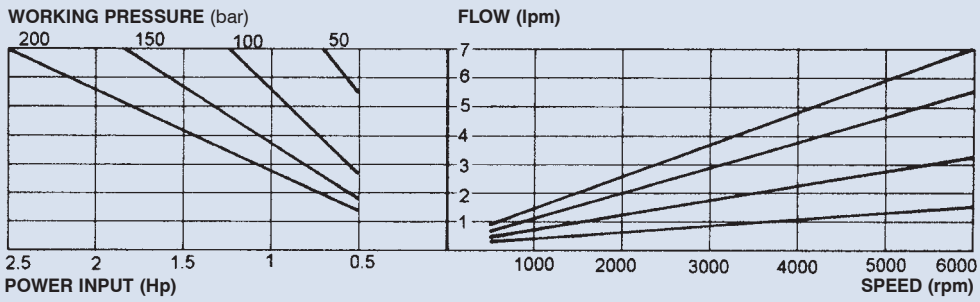

GEAR PUMP

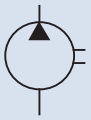

Symbol

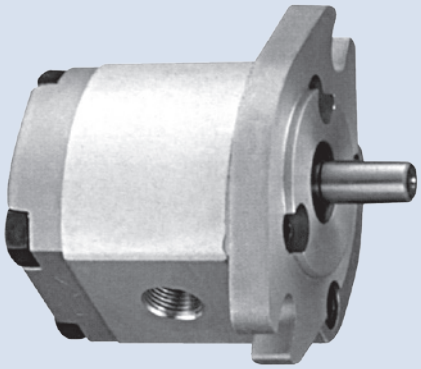

D

How to order

HGP - 1A - F - ※ - R - X - 2B
1 2 3 4 5 6 7

1	Model HGP: Gear pump only PR2: Gear pump with relief (see page 136)
2	Series number
3	Mounting type F: Flange mounting L: Foot mounting
4	Displacement cc/rev
5	Rotation R: Clockwise L: Counter-clockwise
6	Shaft type X: Straight shaft Y: Splined shaft
7	Mounting flange 2B: SAE 2-Bolt 4BD: Din 4-Bolt 4BE: European 4-Bolt

Specifications

Model	Displacement (cc/rev)	Pressure bar (psi)		Runing Speed (rpm)			Weight (kg)
		Working	Max.	Rate	Max.	Min.	
HGP-1A-F1※	1	210 (3000)	250 (3500)	1800	4500	1000	1.0
HGP-1A-F2※	2				4500	600	1.05
HGP-1A-F3※	3				4500	600	1.15
HGP-1A-F4※	4				4000	600	1.18
HGP-1A-F5※	5				3200	600	1.2
HGP-1A-F6※	6				3200	600	1.3
HGP-1A-F8※	7.8				3200	600	1.4

Remark: HGP-1A-F05 (0.5 cc/rev), F08 (0.8 cc/rev) and F2.6 (2.6 cc/rev) are for special order.

Dimensions

HGP-1A-F-※-※-※-2B(SAE 2-Bolt)

Unit:mm

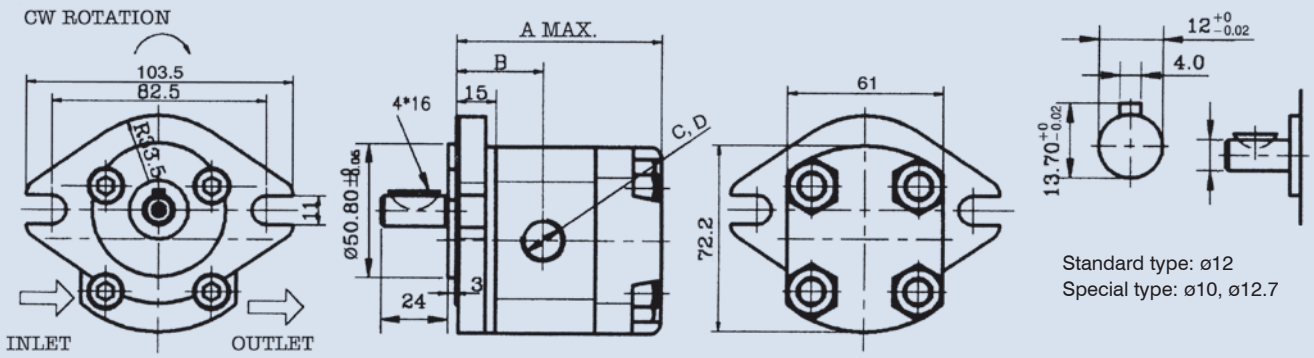

Standard type: ø12
Special type: ø10, ø12.7

GEAR PUMP

Dimensions

HGP-1A-F-※-※-※-4BD (DIN 4-Bolt)

Unit:mm

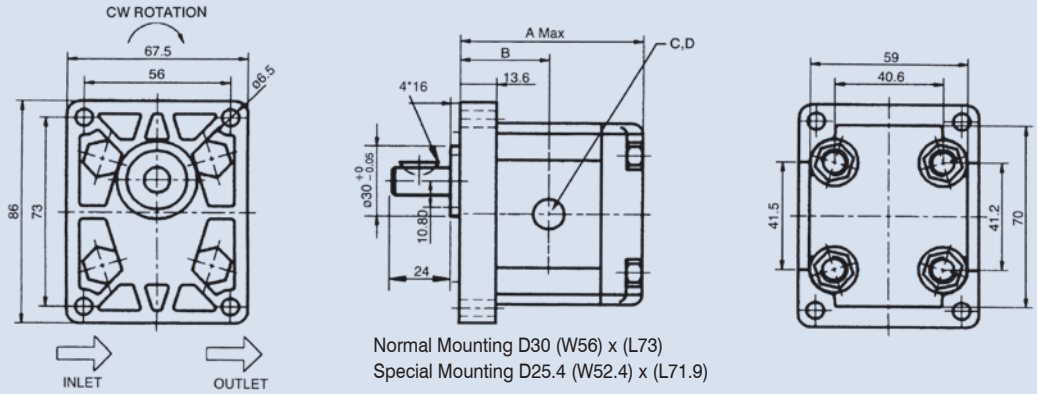

Normal Mounting D30 (W56) x (L73)
Special Mounting D25.4 (W52.4) x (L71.9)

HGP-1A-F-※-※-※-4BE (European 4-Bolt)

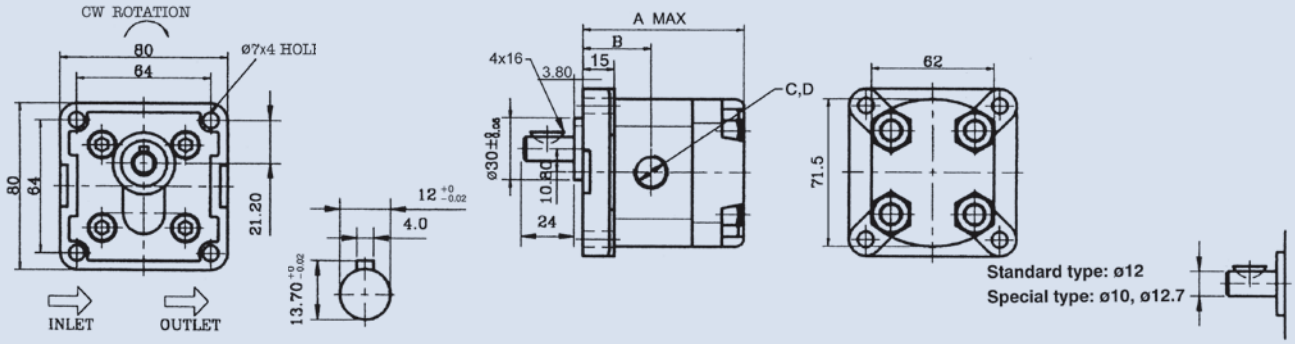

Specifications

Model	Dimension A (mm)		Dimension B (mm)	Port Size C, D	
	4BD	4BE		inlet	outlet
HGP-1A-F08*	67.5	75.5	32.5	3/8" PT	3/8" PT
HGP-1A-F1*	69.5	77.5	33.5	3/8" PT	3/8" PT
HGP-1A-F2*	72	80.1	34.8	3/8" PT	3/8" PT
HGP-1A-F3*	77.5	85.5	37.5	3/8" PT	3/8" PT
HGP-1A-F4*	79.5	87.5	38.5	3/8" PT	3/8" PT
HGP-1A-F5*	82.5	91.5	40.5	3/8" PT	3/8" PT
HGP-1A-F6*	87.5	95.5	42.5	3/8" PT	3/8" PT
HGP-1A-F8*	93.5	101.50	45.5	1/2" PT	3/8" PT

Performance curves

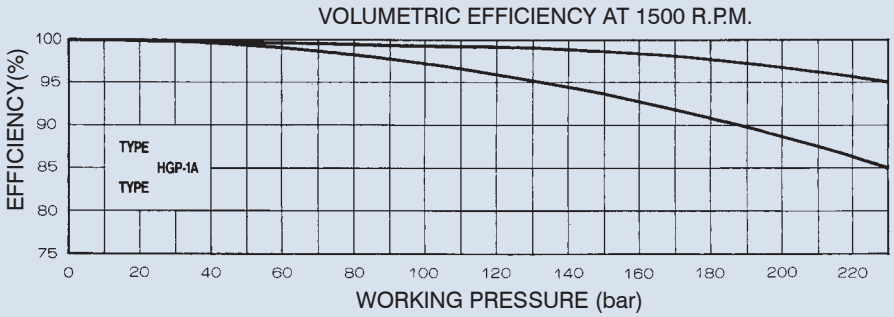

GEAR PUMP

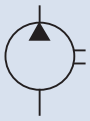

Symbol

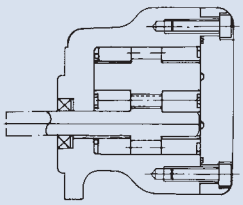

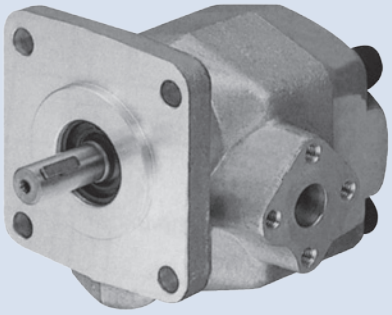

D

How to order

HGP - 2A - F - ※ - R - X - 4BJ
1 2 3 4 5 6 7

1	Model HGP: Gear pump only PR1: Gear pump with relief (see page 135)
2	Series number
3	Mounting type F: Flange type L: Foot type
4	Displacement cc/rev
5	Rotation R: clockwise L: Counter-clockwise
6	Shaft type X: Straight shaft Y: Splined shaft
7	Mounting flange 4BJ: JIS 4-Bolt

Specifications

Model	Displacement (cc/rev)	pressure bar (psi)		Runing Speed (rpm)			Weight (kg)
		Working	Max.	Rate	Max.	Min.	
HGP-2A-※2※	2	210 (3000)	250 (3500)	1800	5000	900	1.69
HGP-2A-※3※	3				5000	850	1.70
HGP-2A-※4※	4				4500	800	1.71
HGP-2A-※6※	6				3500	700	1.72
HGP-2A-※8※	8				3000	600	1.74
HGP-2A-※9※	9				2500	550	1.74
HGP-2A-※11※	11				2000	500	1.74
HGP-2A-※12※	12	175 (2500)	210 (3000)		2000	550	1.76

REMARK: HGP-2A-F2.5 (2.5 cc/rev) and F5 (5 cc/rev) are for special order.

FEATURES:

1. High-Tech aluminum alloy bushings and dry bearings are used to ensure wearing resistance and withstand extra high speed up to 5000 R.P.M.
2. The woodruff key used in this pump withstands much higher torque.
3. A special internal circuit design guarantees that the seal will not be pooped out in case of instant reverse.
4. Dual balanced plating with the bushings is designed such that pump is totally sealed for higher volume efficiency as well as durability.
5. Useful in various applications such as construction machines, Hydraulic elevator and other special purpose machinery.
6. Relief valve can be added on pump case and in connection with lifting valve for use in Hydraulic elevator.

GEAR PUMP

D

Dimensions

HGP-2A

Unit:mm

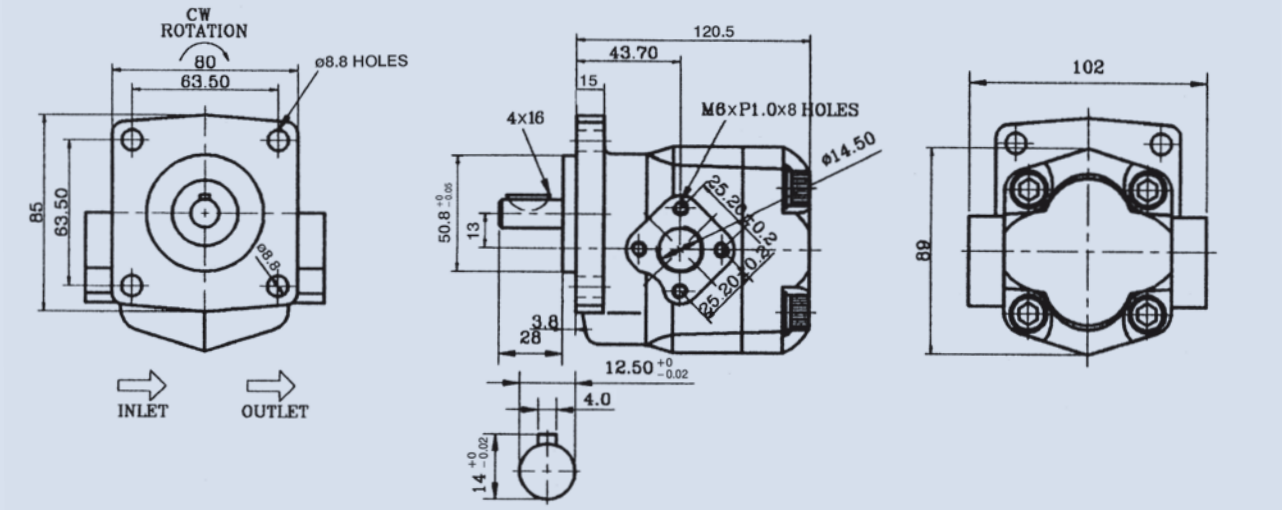

Performance curves

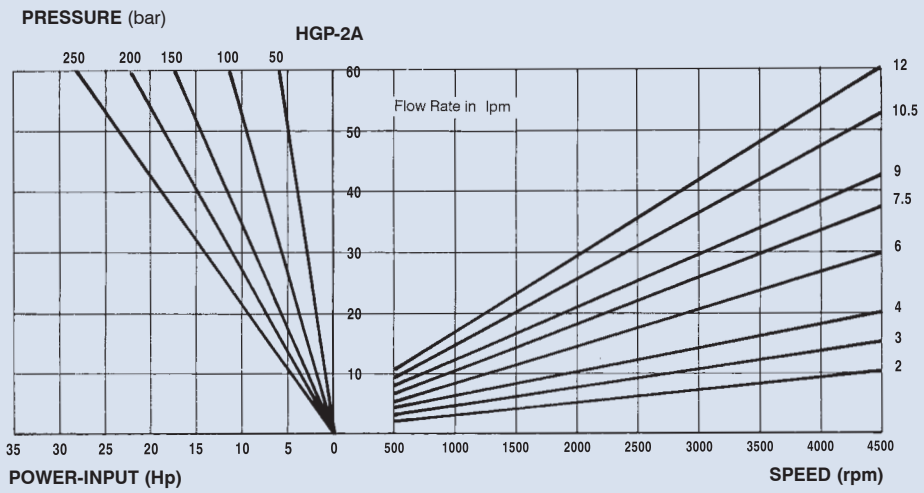

GEAR PUMP

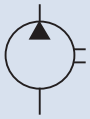

Symbol

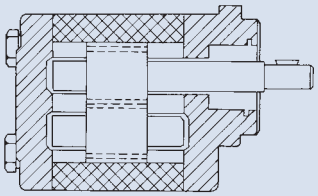

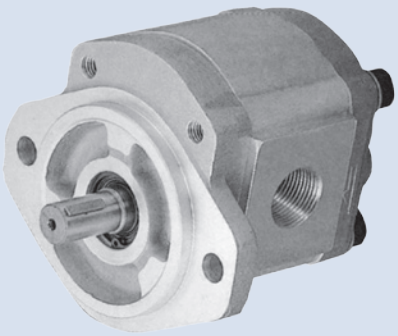

D

How to order

HGP - 3A - F - ※ - R - X - 2B
1 2 3 4 5 6 7

1	Model
2	Series number
3	Mounting type F: Flange type L: Foot type
4	Displacement cc/rev
5	Rotation R: Clockwise L: Counter-clockwise
6	Shaft type X: Straight shaft (Normal: DIA 15.875=2~30 cc/rev, 17.46=33~35 cc/rev) Y: Splined shaft Z: Taper shaft
7	Mounting flange 2B: SAE 2-Bolt 4BD: DIN 4-Bolt

Specifications

Model	Displacement (cc/rev)	Pressure bar (psi)		Runing Speed (rpm)			A	B	Port Size C,D		Weight (kg)
		Working	Max.	Rate	Max.	Min.			Inlet	Outlet	
HGP-3A-※2※	2	210 (3000)	250 (3500)	1800	3000	700	97.4	46.7	3/4"	1/2"	2.19
HGP-3A-※3※	3						99	47.5			2.23
HGP-3A-※4※	4						101	48.5			2.29
HGP-3A-※6※	6						105	50			2.37
HGP-3A-※8※	8.4						109	51.5			2.45
HGP-3A-※11※	11					600	113	54			2.6
HGP-3A-※13※	13						117	56			2.7
HGP-3A-※14※	14.3					500	119	57			2.76
HGP-3A-※17※	16.5						123	59			2.87
HGP-3A-※19※	19.2						127	61			2.99
HGP-3A-※23※	23						134	65			3.19
HGP-3A-※25※	25	175 (2500)	210 (3000)		2800		137	66	1"	3/4"	3.24
HGP-3A-※28※	28						141	68			3.35
HGP-3A-※30※	30				2500		145	70			3.45
HGP-3A-※33※	33	150 (2200)	180 (2600)	1200			150	73			3.6
HGP-3A-※35※	35	130 (1900)	150 (2200)	1200			154	75			3.71

FEATURES:

1. Dual balanced plating and dry bearings used in this pump feature excellent resistance to wearing, thrust, impact, as well as extra high speed revolution.
2. Dual balanced plating with the bushings is designed such that pump is totally sealed for higher volume efficiency as well as durability.
3. The woodruff key used in this pump withstands much higher torque.
4. A special internal circuit design guarantees that the seal will not be popped out in case of instant reverse.
5. Withstands instant pressure up to 210 bar (3000 psi) and runs up to 2000000 cycles.
6. Direction may be changed at any time.

GEAR PUMP

Dimensions

HGP-3A-F-※-※-※ - 2B (SAE 2-Bolt)

Unit:mm

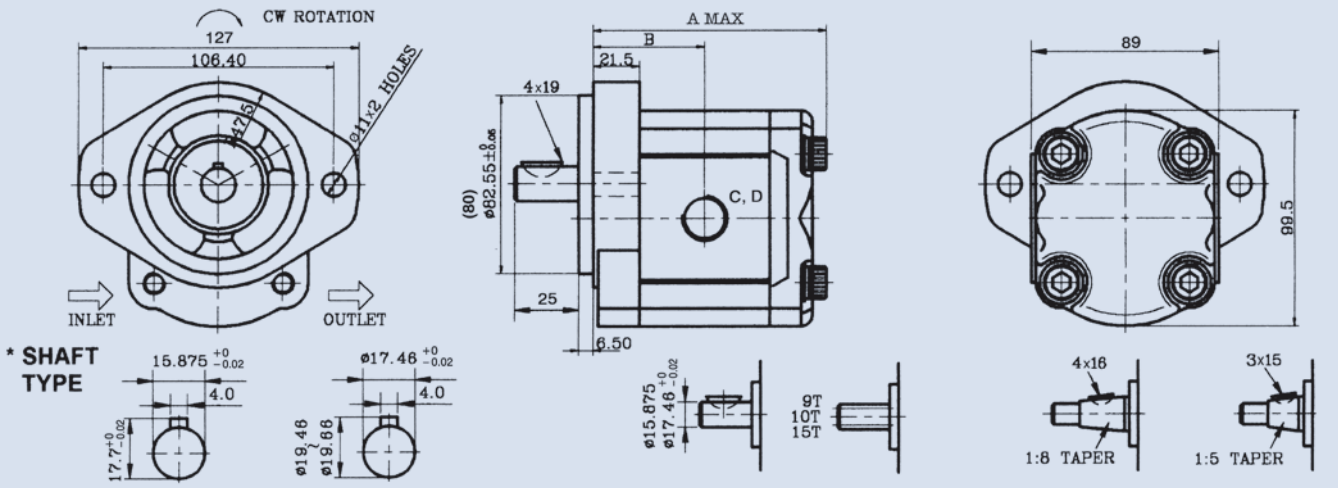

HGP-3A-F-※-※-※- 4BD (DIN 4-Bolt)

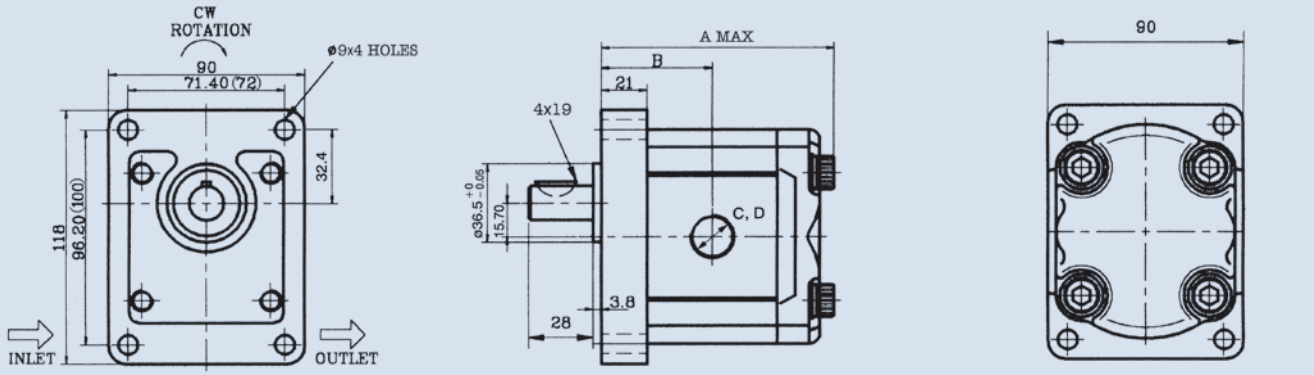

REMARK: The size in ( ) is for special order, see page 131 for the size of A, B and port size C, D.

Performance curves

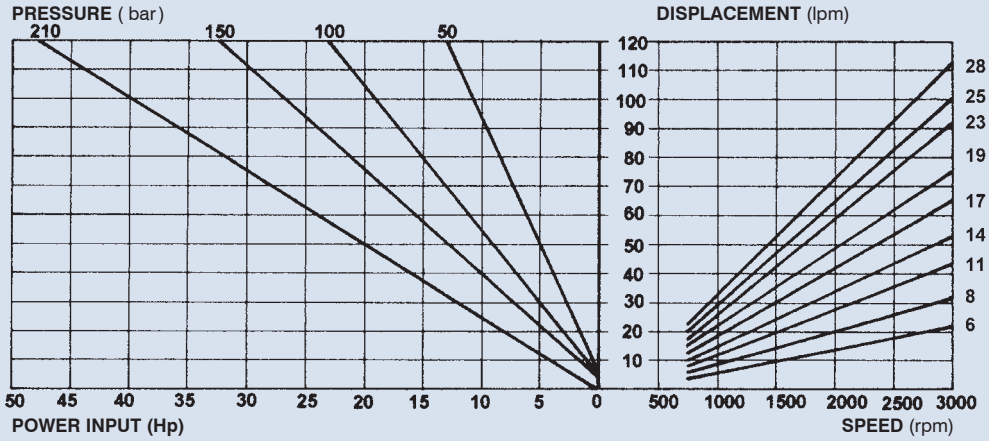

DOUBLE GEAR PUMP

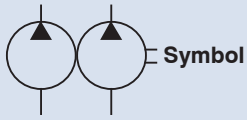

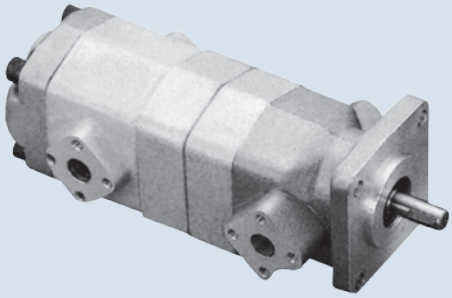

D

How to order

HGP - 22A - F - 32 - R - X - 4BJ
1 2 3 4 5 6 7

1	Model
2	Series number
3	Mounting type F: Flange type L: Foot type
4	Displacement cc/rev 32: P1=3 cc/rev P2=2 cc/rev
5	Rotation R: Clockwise L: Counter-clockwise
6	Shaft type X: Straight shaft Y: Splined shaft Z: Taper shaft
7	Mounting flange 4BJ: JIS 4-Bolt

Specifications

(Refer to page 129)
Working pressure: 210 bar (3000 psi)
Displacement: 4 cc/rev - 24 cc/rev
Mounting flange: JIS 4-Bolt

Dimensions

Unit:mm

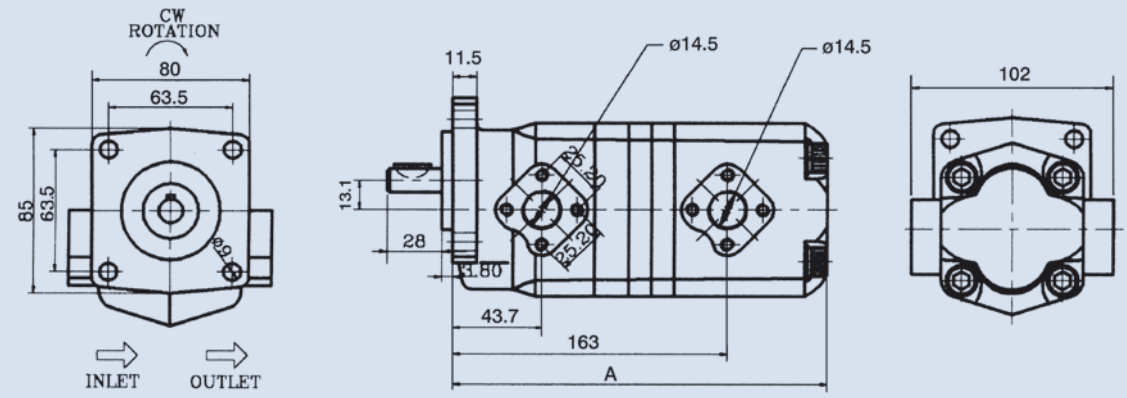

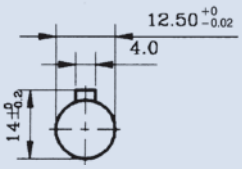

Model	A mm	Model	A mm	Weight (kg)
HGP-22A-*22*	220	HGP-22A-*88*	220	4.5
HGP-22A-*33*	220	HGP-22A-*99*	220	
HGP-22A-*44*	220	HGP-22A-*1111*	220	
HGP-22A-*66*	220	HGP-22A-*1212*	220	

DOUBLE GEAR PUMP

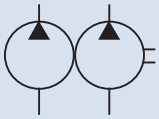

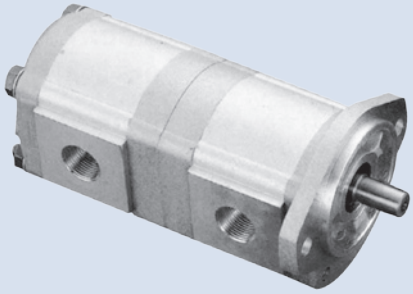

D

How to order

HGP - 33A - F - 32 - R - X - ※
1 2 3 4 5 6 7

1	Model
2	Series number
3	Mounting type F: Flange type L: Foot type
4	Displacement cc/rev 32: P1=3 cc/rev P2=2 cc/rev
5	Rotation R: clockwise L: Counter-clockwise
6	Shaft type X: Straight shaft Y: Splined shaft Z: Taper shaft
7	Mounting flange 2B: SAE 2-Bolt 4BD: DIN 4-Bolt

Specifications

(Refer to page 131)
Working pressure: 210 bar (3000 psi)
Displacement: 4 cc/rev - 70 cc/rev
Mounting flange: SAE 2-Bolt DIN 4-Blot

Dimensions

Unit:mm

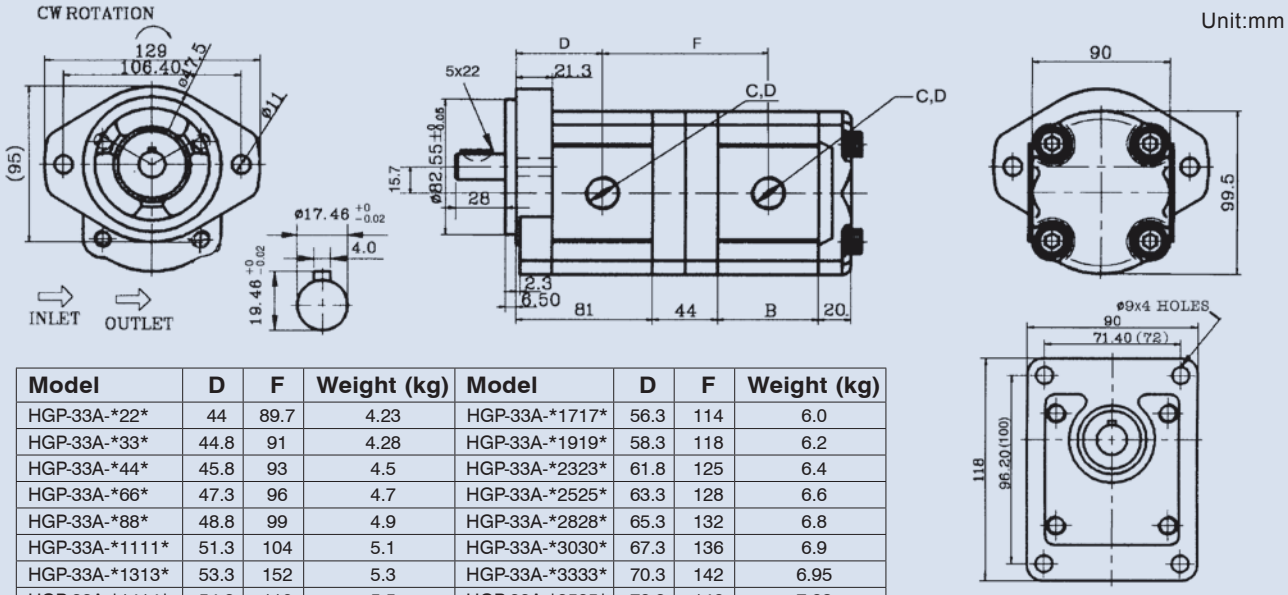

Model	D	F	Weight (kg)	Model	D	F	Weight (kg)
HGP-33A-*22*	44	89.7	4.23	HGP-33A-*1717*	56.3	114	6.0
HGP-33A-*33*	44.8	91	4.28	HGP-33A-*1919*	58.3	118	6.2
HGP-33A-*44*	45.8	93	4.5	HGP-33A-*2323*	61.8	125	6.4
HGP-33A-*66*	47.3	96	4.7	HGP-33A-*2525*	63.3	128	6.6
HGP-33A-*88*	48.8	99	4.9	HGP-33A-*2828*	65.3	132	6.8
HGP-33A-*1111*	51.3	104	5.1	HGP-33A-*3030*	67.3	136	6.9
HGP-33A-*1313*	53.3	152	5.3	HGP-33A-*3333*	70.3	142	6.95
HGP-33A-*1414*	54.3	110	5.5	HGP-33A-*3535*	72.3	146	7.28

Remark: The size in ( ) is for special order, see page 131 for the port size C, D.

GEAR PUMP WITH RELIEF VALVE

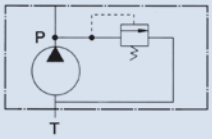

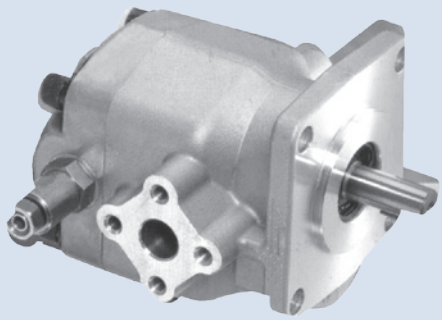

D

How to order

PR1 - F - ※ - R - 4BJ
1 2 3 4 5

1	Model (Reper to page 129, 130)
2	Mounting type F: Flange type L: Foot type
3	Displacement cc/rev
4	Rotation R: Clockwise L: Counter-clockwise
5	Mounting flange 4BJ: JIS 4-Bolt

Specifications

Model	Displacement (cc/rev)	Pressure (bar) (psi)		Runing Speed (rpm)			Weight (kg)
		Working	Max.	Rate	Max.	Min.	
PR1-020	2	210 (3000)	250 (3500)	1800	5000	900	1.69
PR1-030	3				5000	850	1.7
PR1-040	4				4500	800	1.71
PR1-060	6				3500	700	1.72
PR1-075	7.5				3000	600	1.74
PR1-090	9				2500	550	1.74
PR1-105	10.5				2000	500	1.74
PR1-120	12				2000	500	1.76

REMARK: PR1-F2.5 (2.5cc/rev) and F5 (5cc/rev) are for special order.

Dimensions

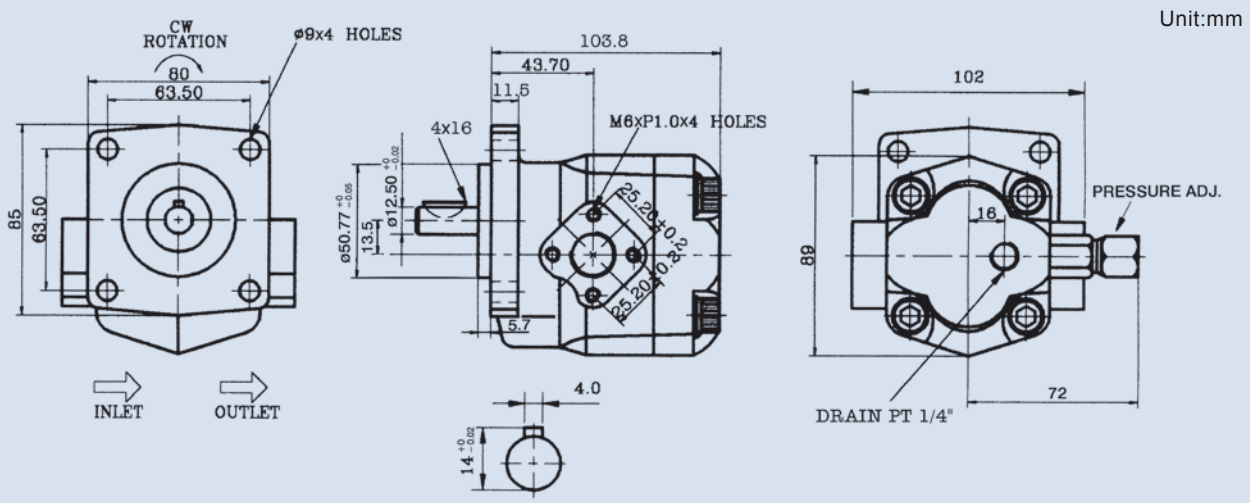

GEAR PUMP WITH RELIEF VALVE

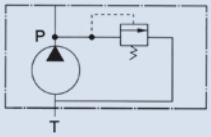

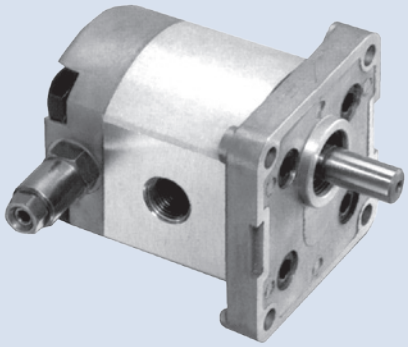

D

How to order

PR2 - F - ※ - R - 4B
1 2 3 4 5

1	Model (Reper to page 127, 128)
2	Mounting type F: Flange type L: Foot type
3	Displacement cc/rev
4	Rotation R: Clockwise L: Counter-clockwise
5	Mounting flange 2B: SAE 2-Bolt 4BD: DIN 4-Bolt 4BE: European 4-Bolt

Specifications

Model	Displacement (cc/rev)	Pressure bar (psi)		Runing Speed (rpm)			Weight (kg)
		Working	Max.	Rate	Max.	Min.	
PR2-010	1	210 (3000)	250 (3500)	1800	4500	1000	1.0
PR2-020	2				4500	600	1.05
PR2-030	3				4500	600	1.15
PR2-040	4				4000	600	1.18
PR2-050	5				3200	600	1.2
PR2-060	6				3200	600	1.3
PR2-080	7.8				3200	600	1.4

PEMARK: PR2-008 (0.8 cc/rev) and PR2-026 (2.6 cc/rev) are for special order.

Dimensions

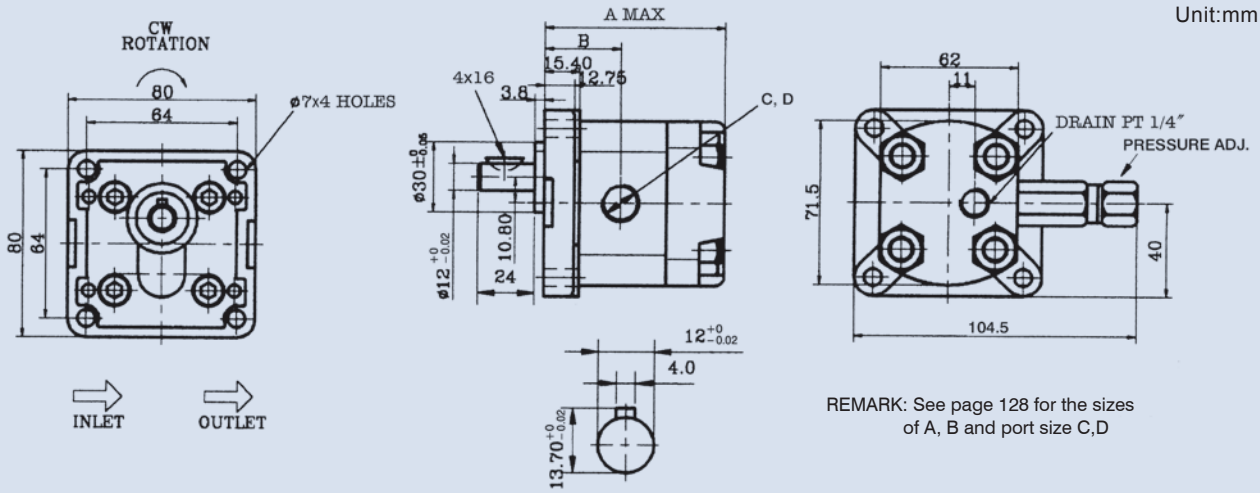

REMARK: See page 128 for the sizes of A, B and port size C,D

GEAR PUMP WITH RELIEF VALVE + LIFT VALVE

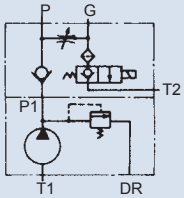

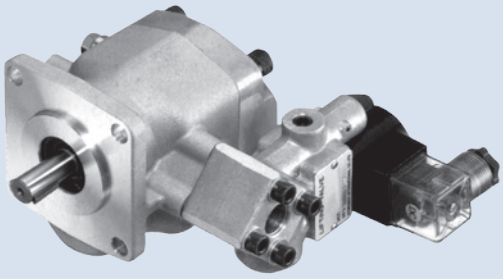

D

How to order

PR1 - F - ※ - R - 4BJ - V2064 - ※

1 2 3 4 5 6 7

1	Model
2	Mounting type F: Flange type L: Foot type
3	Displacement cc/rev
4	Rotation R: Clockwise L: Counter-clockwise
5	Mounting flange 4BJ: JIS 4-Bolt
6	V2064: Lift valve
7	Coil voltage A11: AC110V (50/60 Hz) A22: AC220V (50/60 Hz) D12: DC12V D24: DC24V

Specifications

(Refer to page 135)
Working pressure: 210 bar (3000 psi)
Displacement: 2 cc/rev - 12 cc/rev
Mounting flange: JIS 4-Bolt

Dimensions

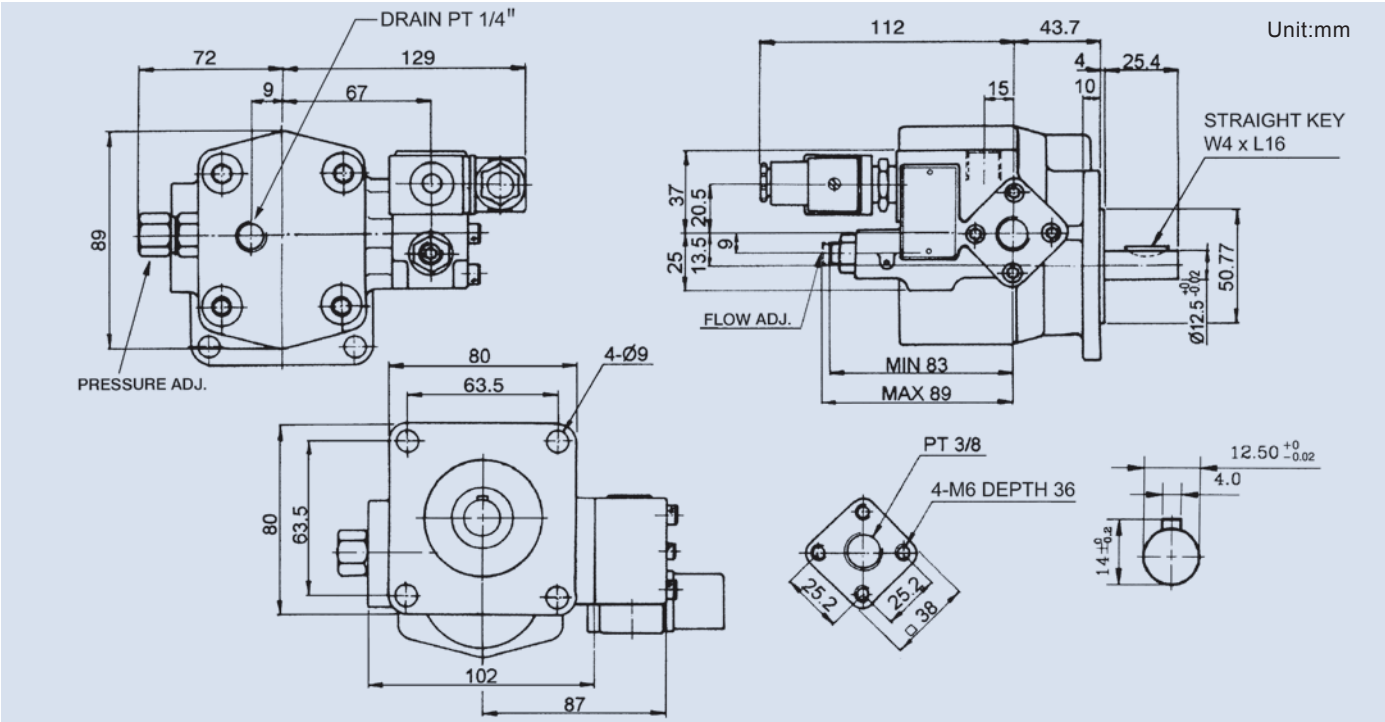

GEAR PUMP WITH RELIEF VALVE + LIFT VALVE

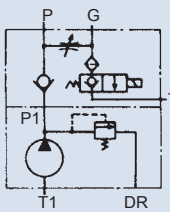

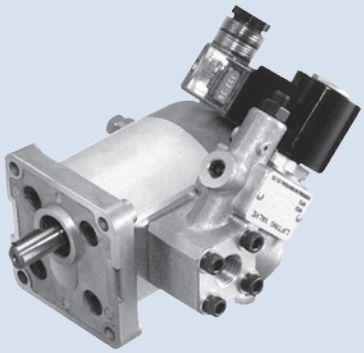

D

How to order

PR2 - F - ※ - R - 4B - 2064 - ※

1 2 3 4 5 6 7

1	Model
2	Mounting type F: Flange type L: Foot type
3	Displacement cc/rev
4	Rotation R: Clockwise L: Counter-clockwise
5	Mounting flange 2B: SAE 2-Bolt 4BD: DIN 4-Bolt 4BE: European 4-Bolt
6	V2064: Lift valve
7	Coil voltage A11: AC110V(50/60 Hz) A22: AC220V(50/60 Hz) D12: DC12V D24: DC24V

Specifications

(Refer to page 136)
Working pressure: 210 bar (3000 psi)
Displacement: 1 cc/rev ~ 7.8 cc/rev

Dimensions

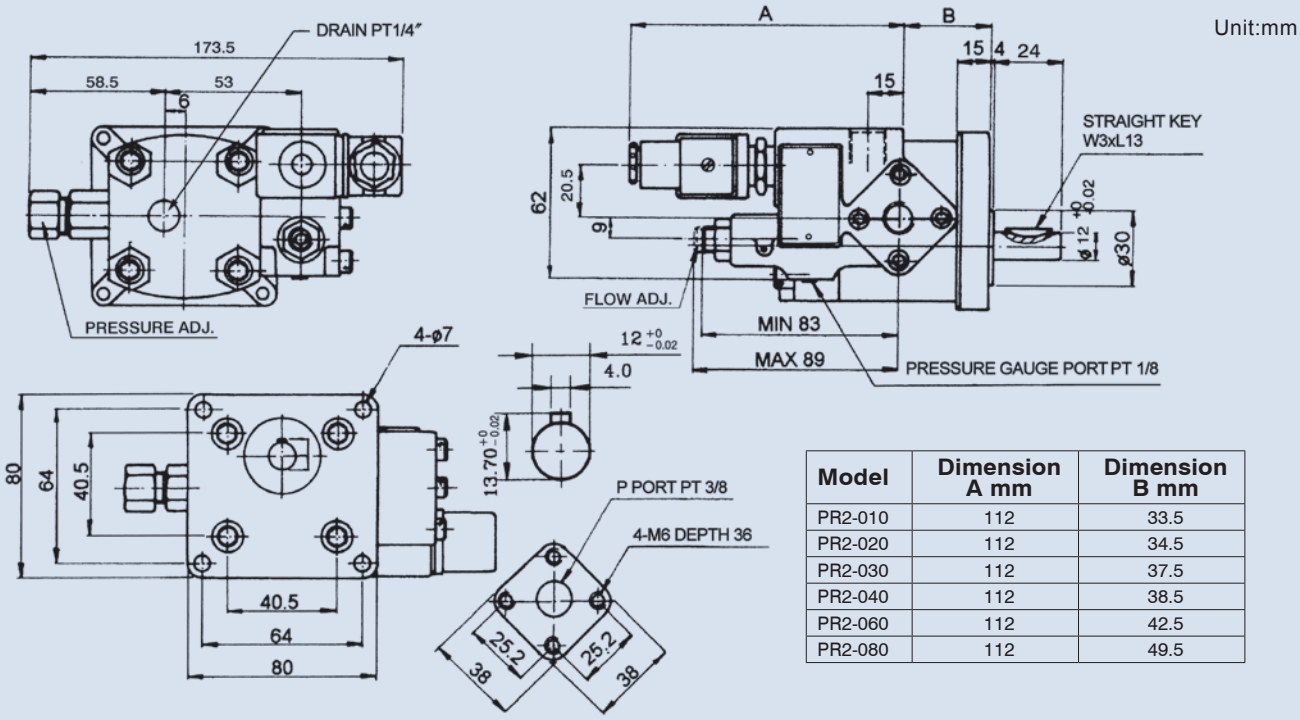

Model	Dimension A mm	Dimension B mm
PR2-010	112	33.5
PR2-020	112	34.5
PR2-030	112	37.5
PR2-040	112	38.5
PR2-060	112	42.5
PR2-080	112	49.5