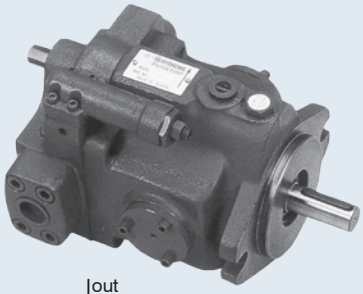

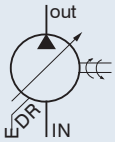

V SERIES AXIAL PISTON PUMP

FEATURES:

1. Combining special internal designs and strict engineering disciplines has reduced noise level to new lows in whole pressure zones.
2. Depending on variety of application needs multiple optional unique control methods are available. It does not only reduce a number of unnecessary hoses, pipes and control valves but also increase efficiency and save horsepower, and cost.
3. Less capacity reservoirs can be selected and applied because of performances of low pressure loss and less head generation.
4. Wide application ranges: it is very suitable for machine tools, plastic injection molding machines, forging machines, other industrial machines and so on.

B

How to order

V - 15 A - 1 - R - B - S - □ – □ – □ – □ – □

1 2 3 4 5 6 7 8 9 10 11 12

1 V: Variable displacement type VR: For Axial port-pipe type VR15 VR18 VR23 VR38 (see page 47)

2 Displacement: 15, 18, 23, 25, 38, 42, 50, 70 (cc/rev)

3 Control types: A,B,C,CG,D,DG,E,EG,F,
FG,G,GJ,GM,HL□,HJ,HK□,HQ□

Code	Spring
None	Standard pressure: 7 bar
B	Middle pressure: 14 bar
C	High pressure: 21 bar

* This spring code is useful for HL, HK, HQ types.

4 Pressure adjusting 1: 8-70 bar 2: 15-140 bar 3: 20-210 bar 4: 20-250 bar

5 Shaft rotation (Viewed from shaft end) R: Clockwise L: Counter clockwise

6 Direction of pipe connections: None: Side port B: Axial port

7 None: S: SAE. J498b

Code	Type	Number of teeth	Pitch
S	V15 V18	13	16/32 DP
S1		9	
S2		11	

Code	Type	Number of teeth	Pitch
S	V23,V25 V38,V42	13	16/32 DP
S1		15	
S	V50 V70	14	12/24 DP
S1		17	

8 Voltage: A: AC 100V (50/60Hz) B: AC 110V (60Hz) C: AC 200V (50/60Hz) D: AC 220V (60Hz) E: DC 12V F: DC 24V

9 Threads Code

Code	Port	Threads
10	PT	Pipe type
40	BSPP (G)	Metric

Code	Port	Threads
50	NPT	Inch
60	SAE (O-ingring)	Inch

Code	Port	Threads
70	M	Metric

10 Thru drive & 2nd pump:

None: Single pump C: SAE AA, ø50.8 mm D: SAE A, ø82.55 mm E: SAE B,ø101.6 mm F: SAE C, ø127 mm
I: Metric, ø63 mm J: Metric, ø80 mm K: Metric, ø100 mm L: Metric, ø125 mm

11 Design number: X: Standard X1: Low Pressure Z: Idling Relief

12 Links type (For V15, V18): None: Standard A: SAE A 2 bolt

Specifications

Model	Displacement cc/rev (in³/rev)	Unloading Conditions (lpm) (GPM)		Pressure Adj. Range bar (psi)	Max. Pressure bar (psi)	Input Speed Range (rpm)		Weight (kg)
		1500 rpm	1800 rpm			Min.	Max.	
V15A	15 (0.90)	22.5 (5.78)	27.0 (7.05)	1: 8-70 (115-100) 2: 15-140 (210-2000) 3: 20-210 (280-3000) 4: 20-250 (280-3500)	250 (3500)	500	1800	13
V18A	17.8 (1.09)	26.7 (7.05)	32.0 (8.45)					13
V23A	23.0 (1.40)	35.4 (9.11)	41.4 (10.94)					22
V25A	25.0 (1.52)	37.5 (9.66)	45.0 (11.60)		210 (3000)			22
V38A	37.8 (2.31)	56.7 (14.98)	68.0 (17.96)		250 (3500)			26
V42A	42.0 (2.56)	63.0 (16.23)	76.0 (19.58)		210 (3000)			26
V50A	51.5 (3.14)	77.2 (20.37)	92.7 (4.49)					55
V70A	69.7 (4.25)	104.5 (27.60)	125.4 (33.13)					56
V15A-V15A	15 / 15	22.5 / 22.5	27 / 27		250 (3500)			28.5
V23A-V23A	23.0 / 23.0	35.4 / 35.4	41.4 / 41.4					46.5
V15A-V38A	15 / 37.8	22.5 / 34.5	27 / 68					41.5
V38A-V38A	37.8 / 37.8	56.7 / 56.7	68 / 68					54.5
V15A-V70A	15 / 69.7	22.5 / 104.5	27 / 125.4		210 (3000)			71.5
V38A-V70A	37.8 / 69.7	56.7 / 104.5	68 / 125.4					84.5

V SERIES AXIAL PISTON PUMP

Control Types

Control Types	JIS Symbols	Characteristics	Feature
A: Pressure Compensator Control	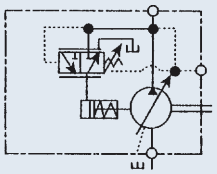	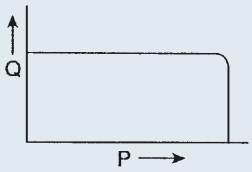	**1.** When system pressure increase and reach preset pressure the flow decrease automatically and pressure maintain without changing. **2.** Power and pressure can be adjusted manually.
B: Multi-stage Flow & Single stage Pressure Control Type (With Cylinder)	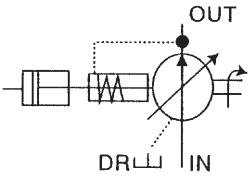	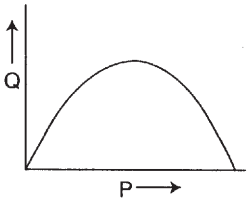	**1.** Flow can be adjusted from 0 to maximum and pressure can be maintaining at preset pressure. **2.** Absorbing impact and vibration which are produced by up and down motions of actuators. It is suitable for lifting equipment etc.
C: 2 stage Pressure & Flow Control Type	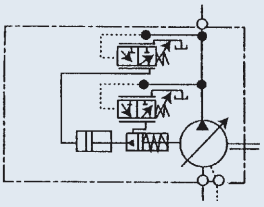	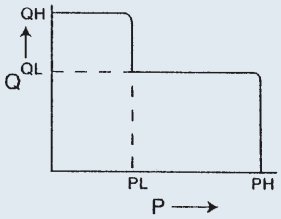	**1.** Low consumption electric motor can be selected to save energy because of the functions of high flow at low pressure and low flow at high pressure. **2.** When pressure increase and reach preset pressure "PH", flow is reduced to "QL". **3.** Pressure "PH""PL", and Flow "QH""QL" can be adjusted optionally. **4.** It is applied to actuators requiring long unloaded or short loaded strokes. Speedy and horsepower efficient.
CG: 2 stage remote Pressure & Flow Control Type	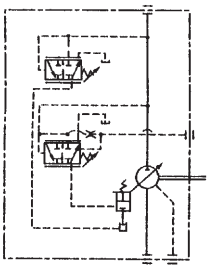	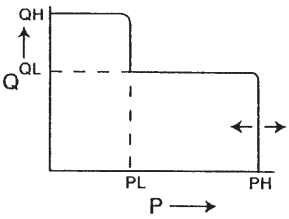	**1.** The same function of "C" control type. **2.** The pressure and the range can be adjusted remotely by the integrated remote pressure control valve. **3.** Proportional Electro-hydraulic pressure control can be applied with HYDROME proportional valve.
D: Solenoid Controlled Pressure Compensating Type with Unloading Device	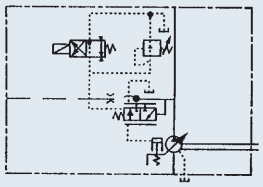	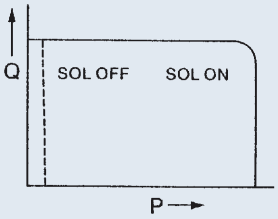	**1.** Same as type A and unloading function added. **2.** It is applied to systems requiring long term unloading operation. **3.** When solenoid is turned off, pump operation under unloading condition maintains low noise level and oil heat generation.
DG: Solenoid Controlled Pressure Compensating Type with Unloading & Remote Device	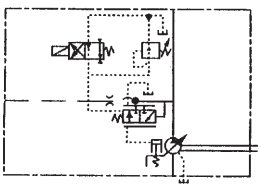	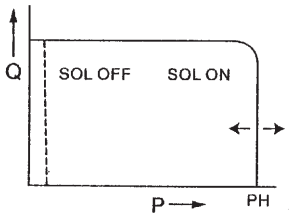	**1.** The same function of "C" control type. **2.** The pressure and the range can be adjusted remotely by the integrated remote pressure control valve. **3.** Proportional Electro-hydraulic pressure control can be applied with HYDROME proportional valve.

V SERIES AXIAL PISTON PUMP

Control Types

Control Types	JIS Symbols	Characteristics	Feature
E: Dual Pressure Control	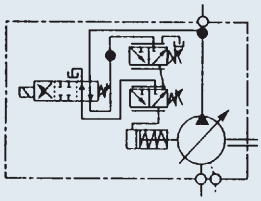	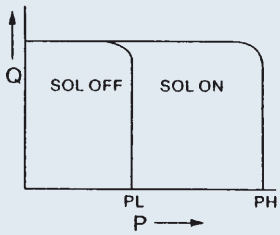	**1.** Preset high and low pressure can be controlled by switching directions of solenoid control valves. **2.** This type is applied to actuators requiring 2 stage pressures with single speed. **3.** One of "PL" and "PH" can be optionally be high pressure.
EG: Dual & Remote Pressure Control	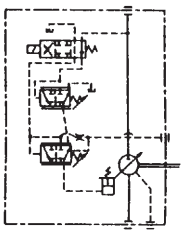	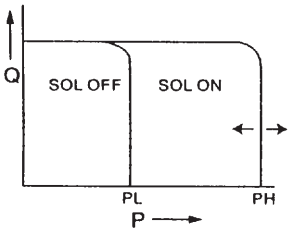	**1.** The same function of "E" control type. **2.** The pressure and the range can be adjusted remotely by the integrated remote pressure control valve. **3.** Proportional Electro-hydraulic pressure control can be applied with HYDROME proportional valve.
F: 2 flow-2 pressure p.c.by solenoid operated valve	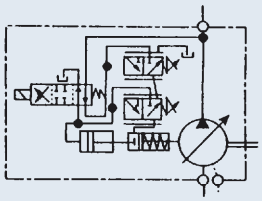	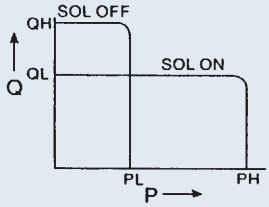	**1.** Actuators can be shifted slowly (high pressure low flow) and quickly (low pressure high flow) by switching directions of solenoid control valve. When solenoid valve turns on, pressure increase to "PH", and flow decrease to "QL". **2.** Pressure "PL", "PH" and flow "QL", "QH" can be adjusted optionally. **3.** This type is applied to actuator requiring operations of shift speed from high to low or low to high.
FG: 2 flow-2 pressure p.c. by solenoid operated & remote valve	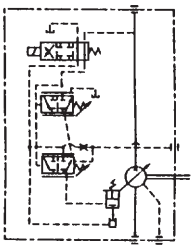	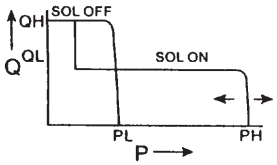	**1.** The same function of "F" control type. **2.** The pressure and the range can be adjusted remotely by the integrated remote pressure control valve. **3.** Proportional Electro-hydraulic pressure control can be applied with HYDROME proportional valve.
G: Remote pressure compensator control	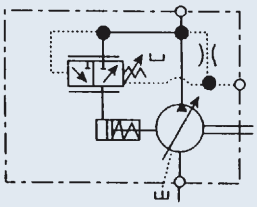	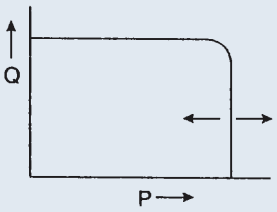	**1.** The same function of "A" control type. **2.** Pressure can be adjusted remotely by the integrated remote pressure control valve.
GJ: Proportional Pressure with interface	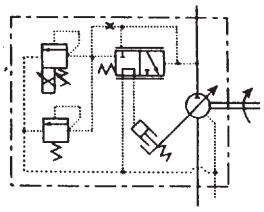	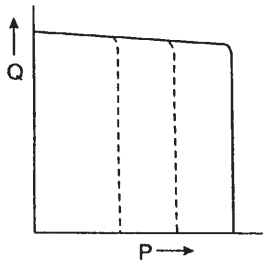	**1.** Same as Type "GM" and proportional valve added. **2.** The proportional valve is installed on the NG 6 interface to reach Proportional Electro-hydraulic control to save energy.

B

V SERIES AXIAL PISTON PUMP

B

Control Types

Control Types	JIS Symbols	Characteristics	Feature
GM: Remote Interface (Not include pilot valve)	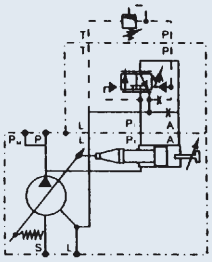	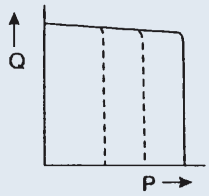	**1.** GM control with a NG6 interface, supply an installation for pilot valve to prove the operating pressure. The pressure setting can be set directly from the control panel of the machine. **2.** The remote pressure compensator responds faster and offers more stable pressure. **3.** The adjustment can also be manual or proportional pressure control.
HL: Load Sensing Compensator	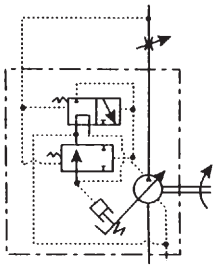	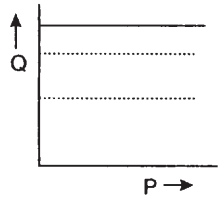	**1.** The pump outlet can be controlled by the setting pressure value of flow control valve. An ideal energy conservation system can be configurated by combining the proportional directional control. **2.** When setting pressure value, flow is changed depending on throttle valve. The sensing flow feedback function can reach to low oil heat generation and saving energy.
HJ: Load Sensing & Proportronal Electro-hydraulic Pilot Relief Valve	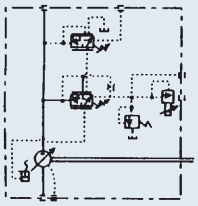	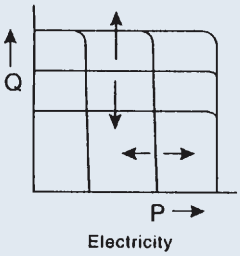	**1.** Same as Type "HL" and proportional pressure function added. **2.** Supplied with proportional Electro-hydraulic pilot relief valve can reach to horse-saving and energy-saving.
HK: Proportional Electro-hydrauic Load Sensing Type	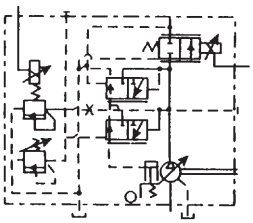	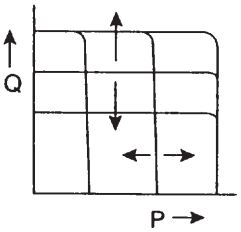	**1.** HK type supplies the system pressure and flow depending on the proportional pressure and flow, voltage, and load value to save the energy. When in waiting circle, the outlet displacement and horse power loss are colse to zero. When pressure reaches to preset value, the flow decrease to the min., and the pressure is constant to reach low oil heat generation and energy loss. **2.** HK type can save 30%~50% energy compare to vane pump and gear pump+PQ valve. It is an energy-saving and environmental design.
HQ: Load-sensing Proportional Flow control	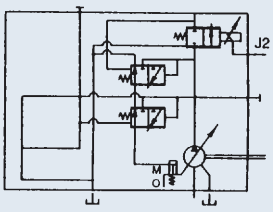	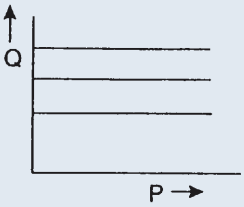	**1.** Same as Type "HL" and proportional flow function added. **2.** The proportional flow control allows the adjustment of the pumps output flow with an electrical input signal. Supplied and adjusted the displacement by the electronic control module.

V SERIES AXIAL PISTON PUMP

Performance curves

MEASURING CONDITIONS

ROOM TEMPERATURE:20±2°C
SPEED OF ROTATION:1800 rpm
OIL:ISO VG 32-68
OIL CAPACITY:40 lpm
ADOPTS SEALED CIRCUIT:70 bar
ADJUST PRESSURE:35 bar

V15, 18 Series

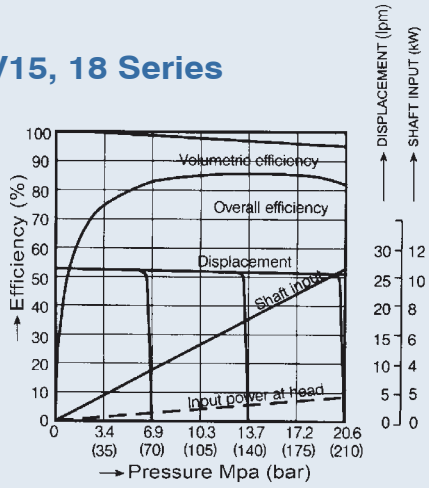

V23, 25 Series

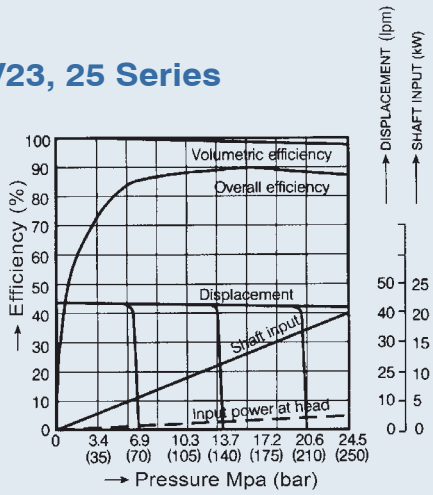

V38, 42 Series

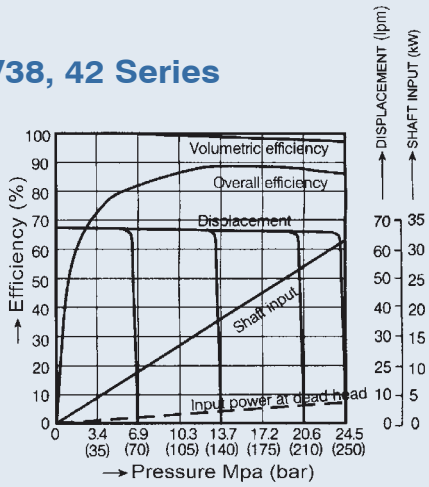

V50 Series

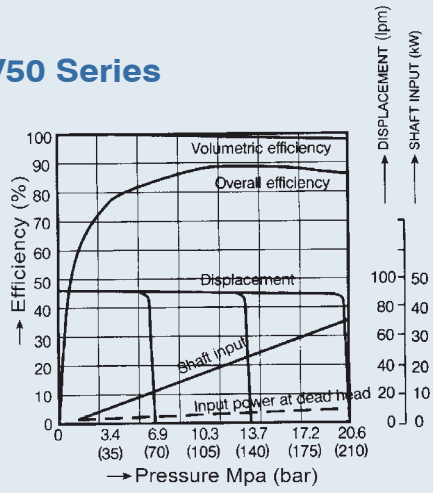

V70 Series

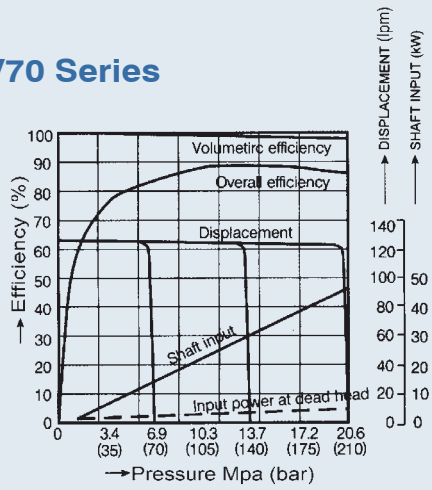

B

V SERIES AXIAL PISTON PUMP

Performance curves

V15, 18

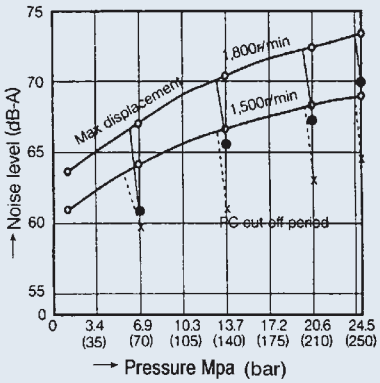

V23, 25

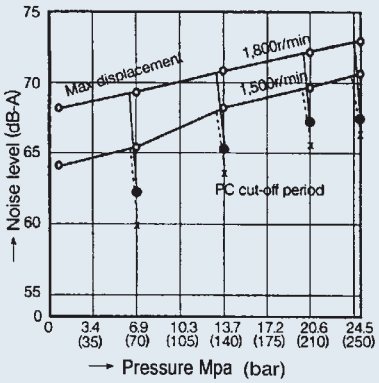

V38, 42

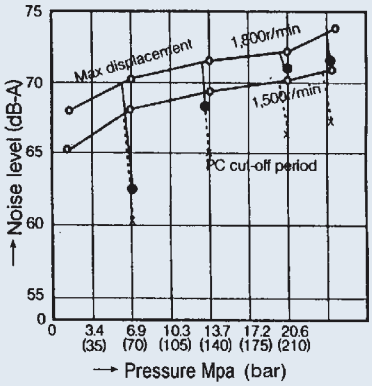

V50, 70

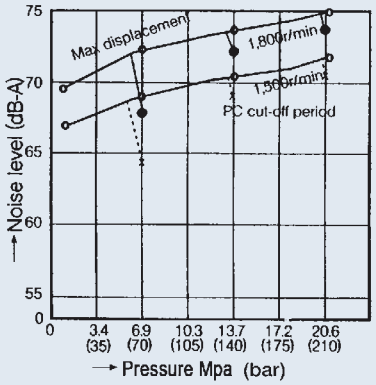

V15, 18 Drain volume characteristic

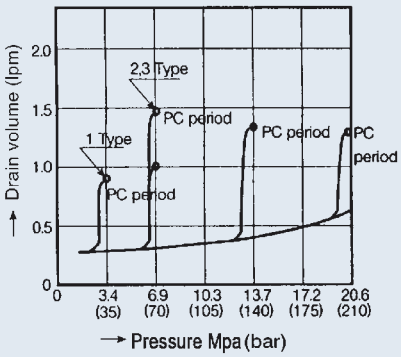

V23, 25 Drain volume characteristic

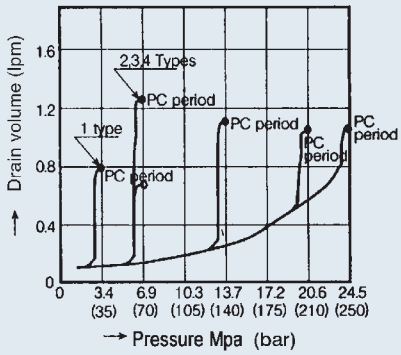

V38, 42 Drain volume characteristic

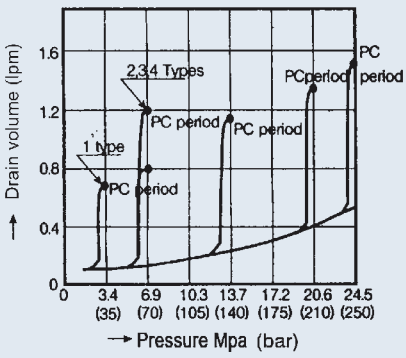

V50, 70 Drain volume characteristic

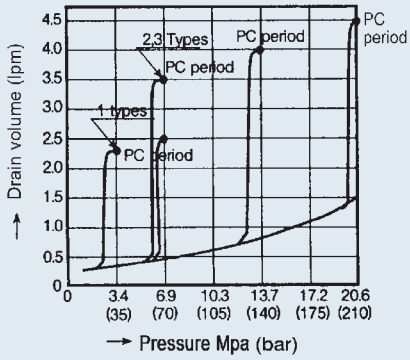

V SERIES AXIAL PISTON PUMP

Dimensions

V15A, V18A Pressure Compensator

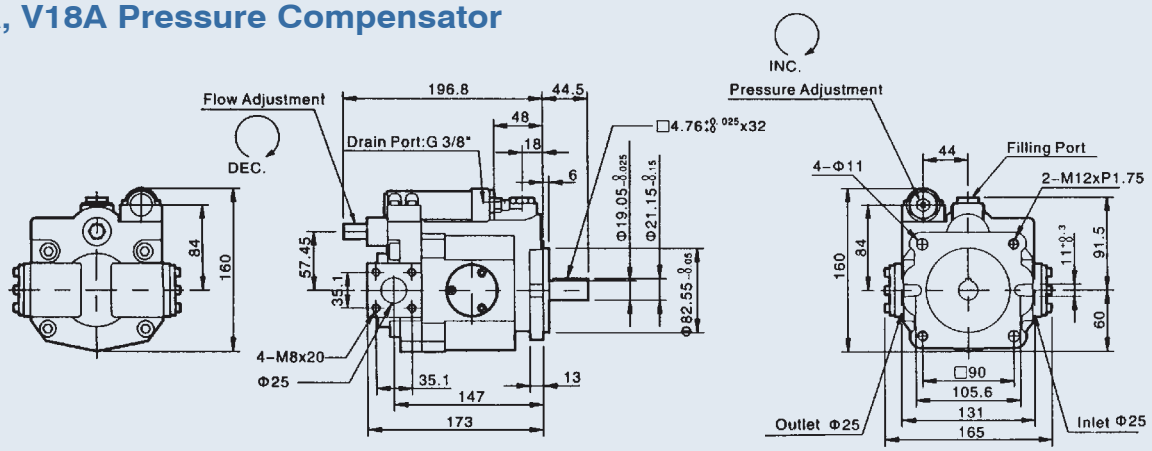

V15A, V18A Pressure Compensator (SAE A 2 bolt)

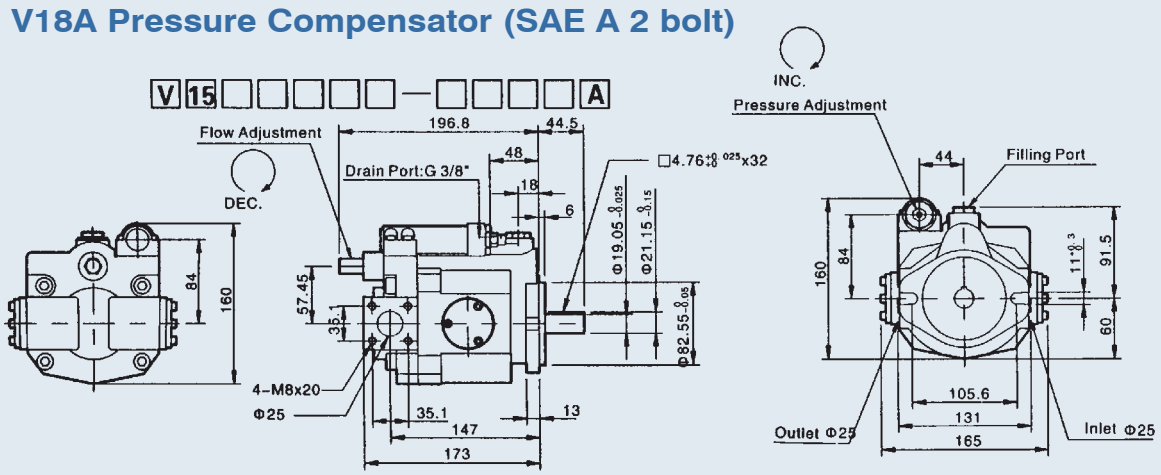

V15B, V18B Multi-stage Flow & Single-stage Pressure Compensator Control (With cylinder)

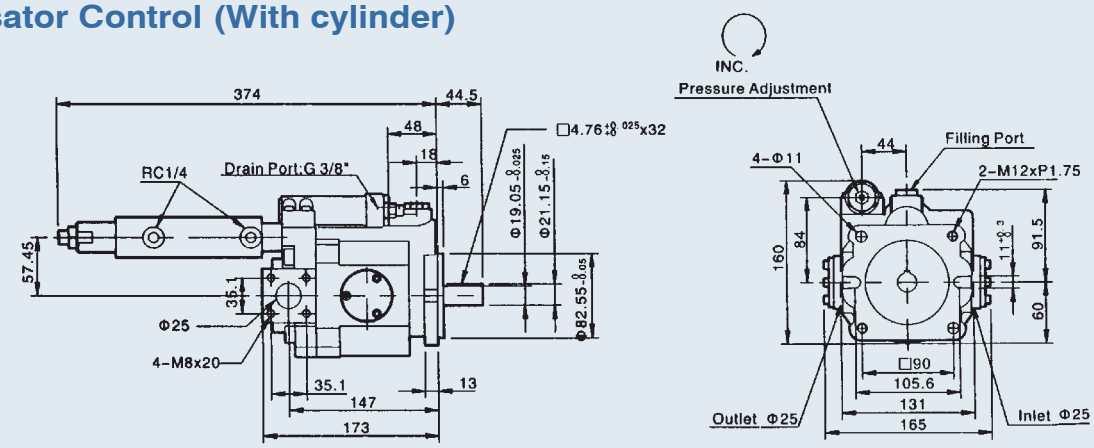

B

V SERIES AXIAL PISTON PUMP

Dimensions

V15C, V18C 2-stage Pressure & Flow Control Type

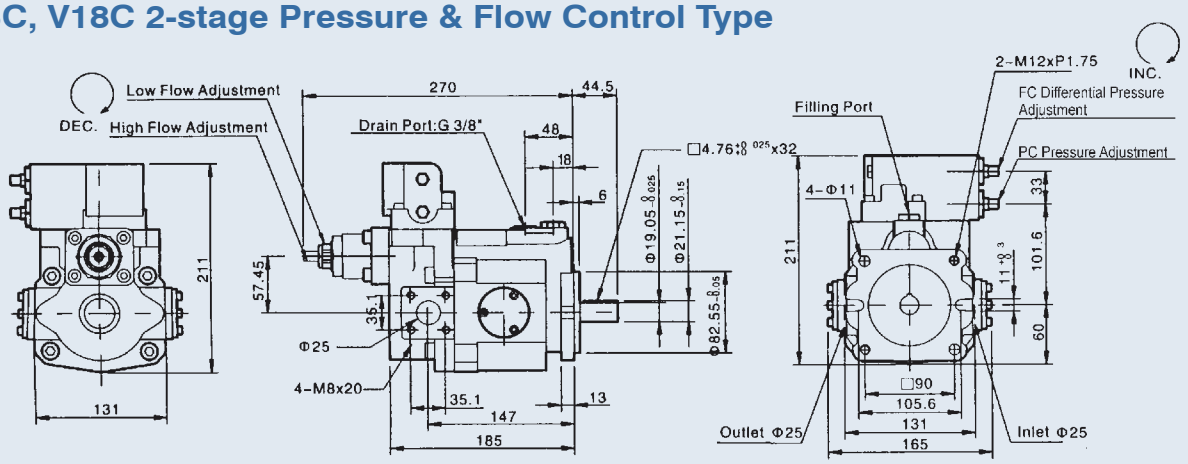

V15CG, V18CG 2-stage Pressure & Flow Control Type with Remote

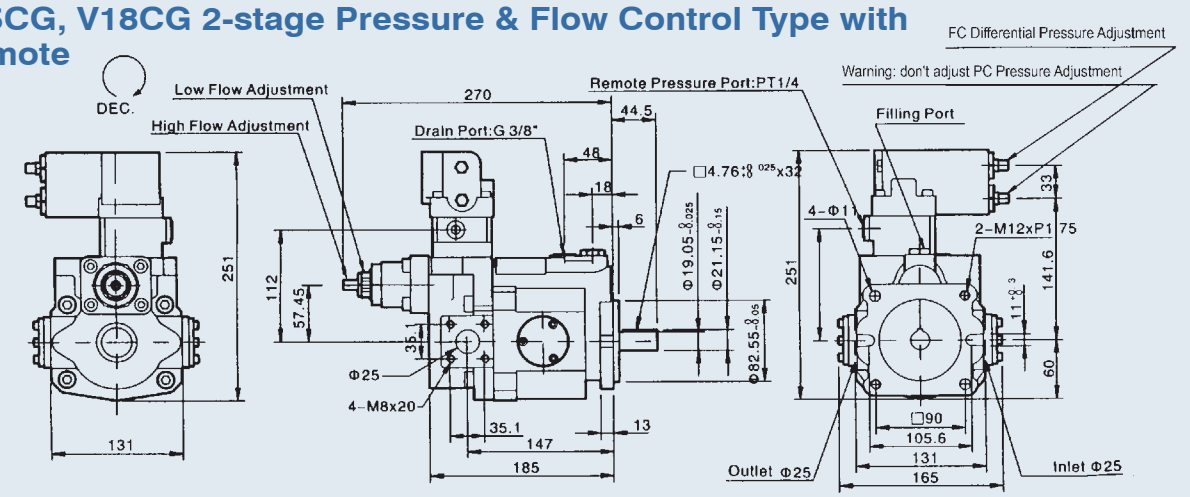

V15D, V18D Solenoid Controlled Pressure Compensating Type with Unloading Device

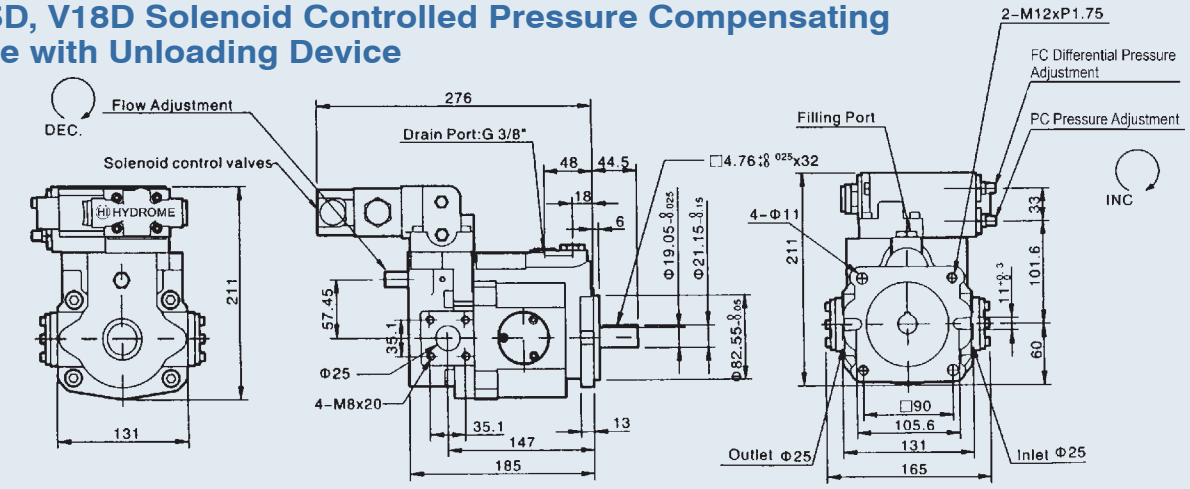

V SERIES AXIAL PISTON PUMP

Dimensions

V15DG, V18DG Solenoid Controlled Pressure Compensating Type with Unloading Device & Remote

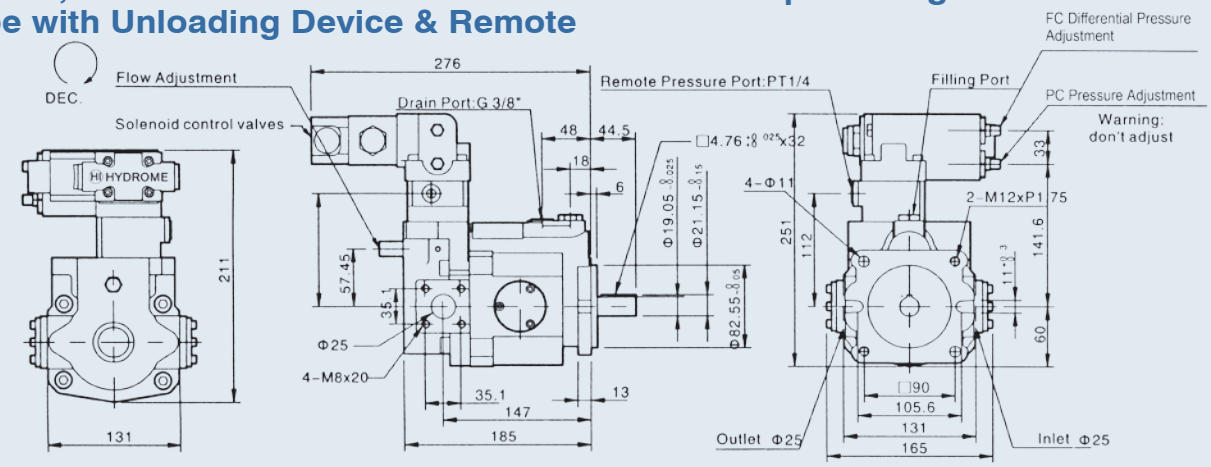

V15E, V18E Dual Pressure Control

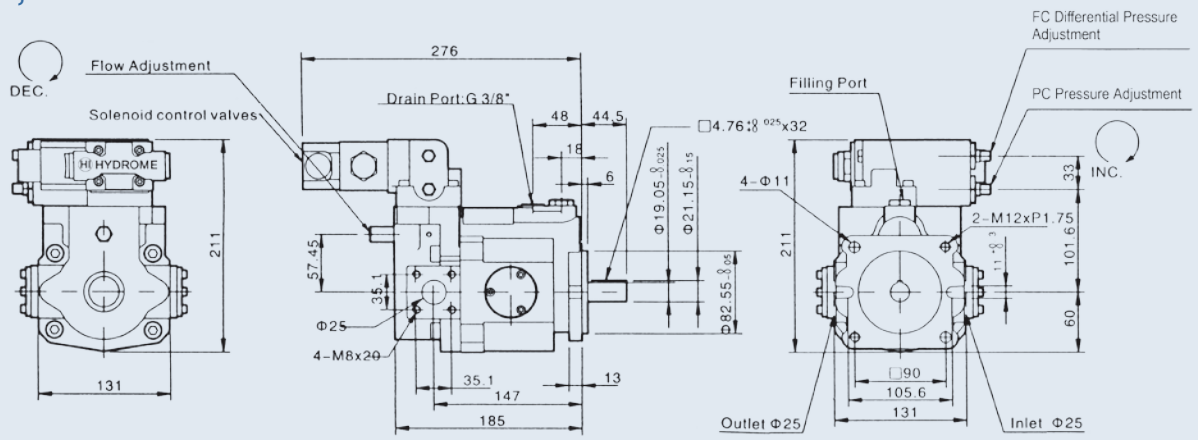

V15EG, V18EG Dual & Remote Pressure Control

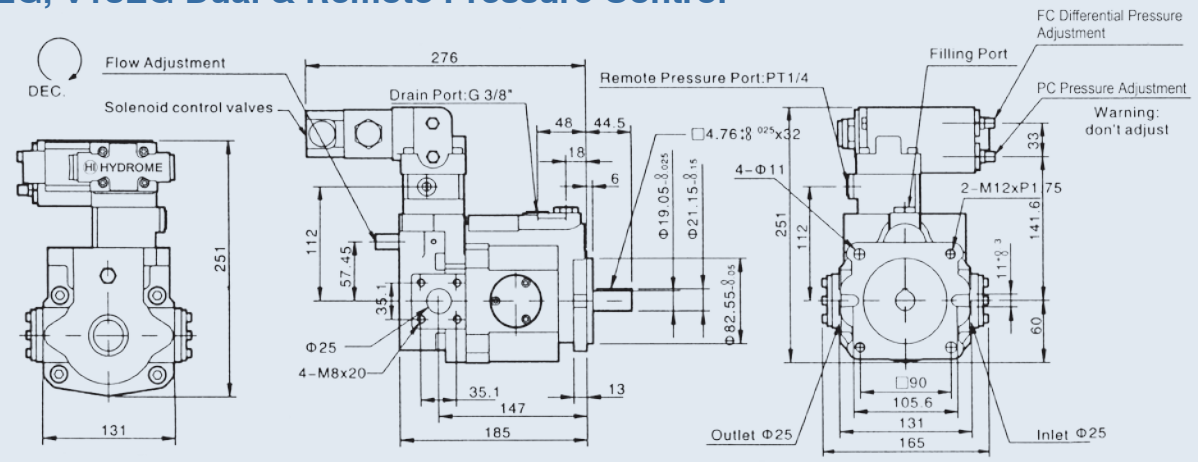

V SERIES AXIAL PISTON PUMP

Dimensions

V15F, V18F 2 Flow-2 Pressure Control by Solenoid Operated Valve

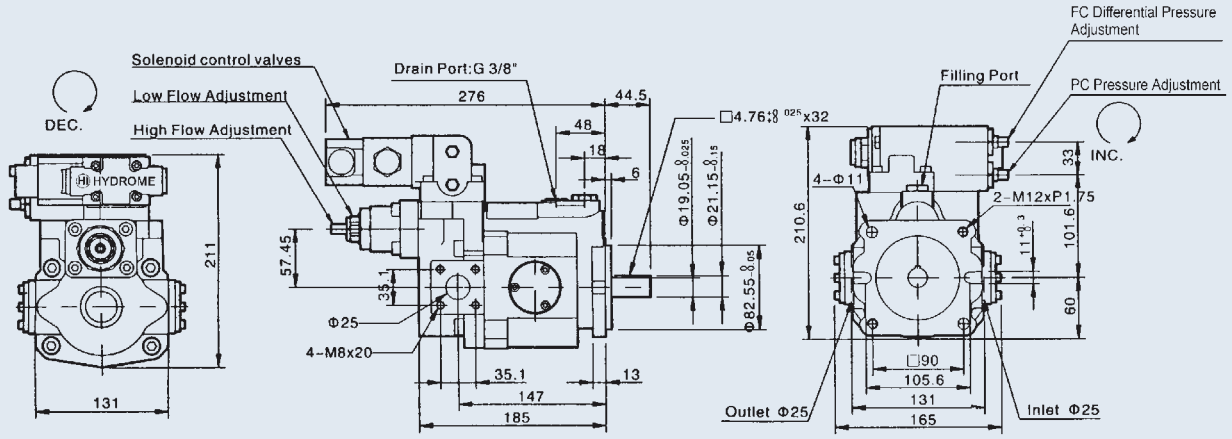

V15FG, V18FG 2 Flow-2 Pressure Control by Solenoid Operated & Remote Valve

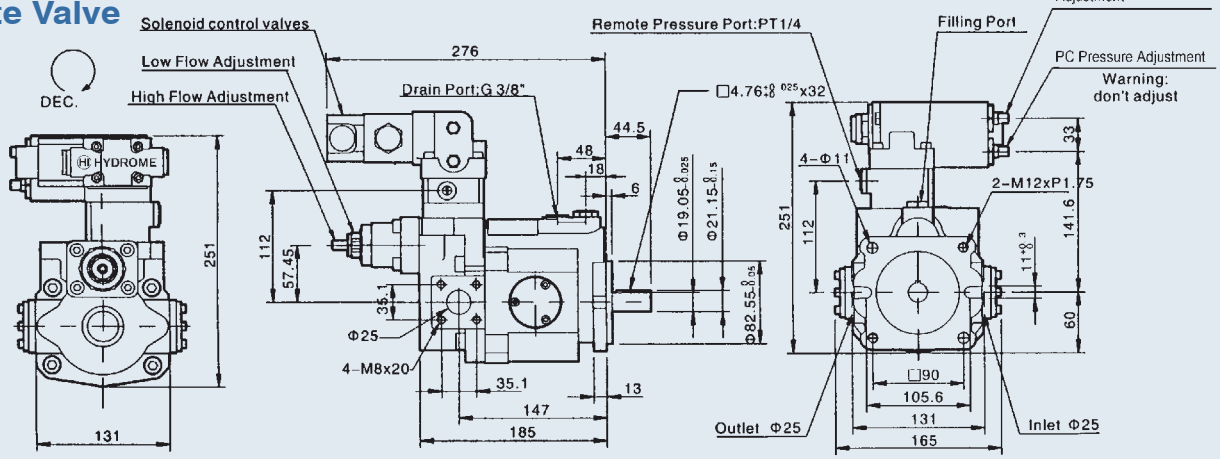

V15G, V18G Remoted Pressure Compensator Control

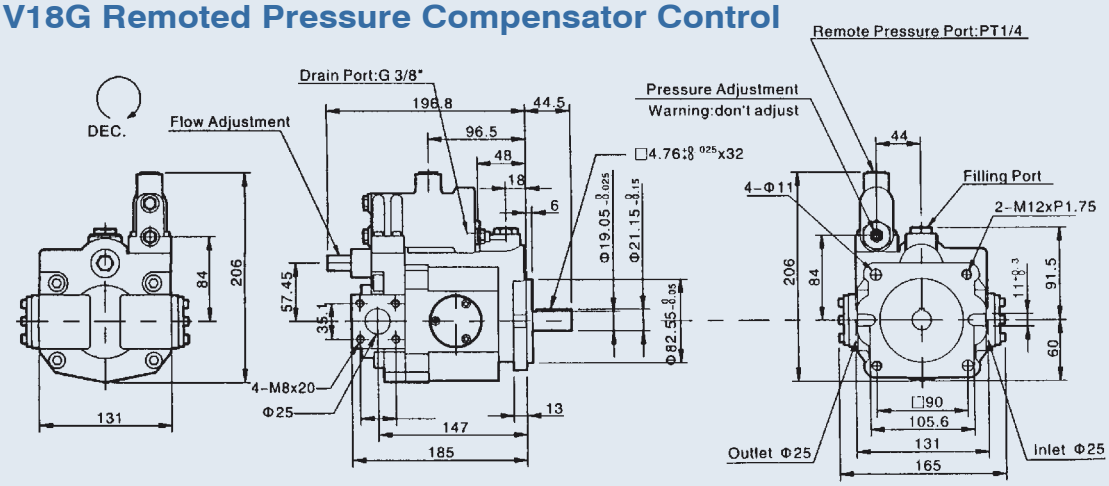

V SERIES AXIAL PISTON PUMP

Dimensions

V15GJ, V18GJ Proportional Pressure with Interface

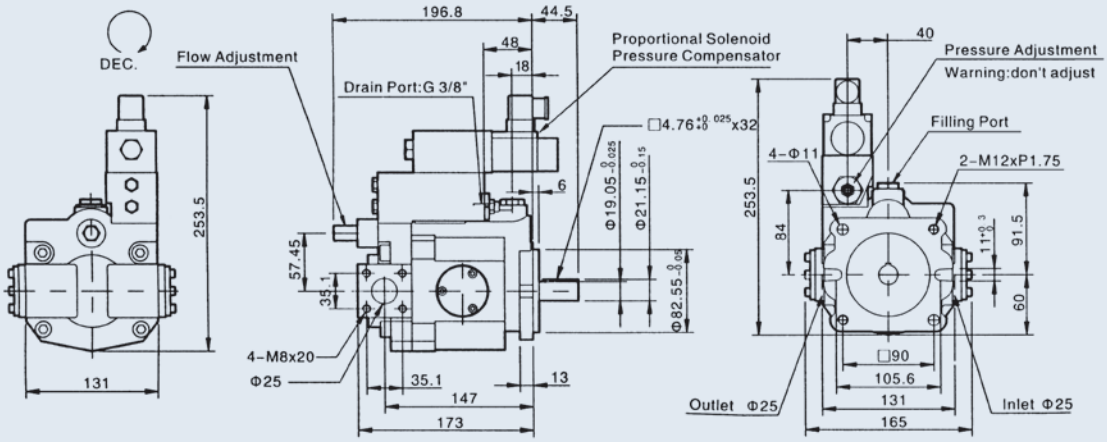

V15GM, V18GM Remote Interface (Not include valve)

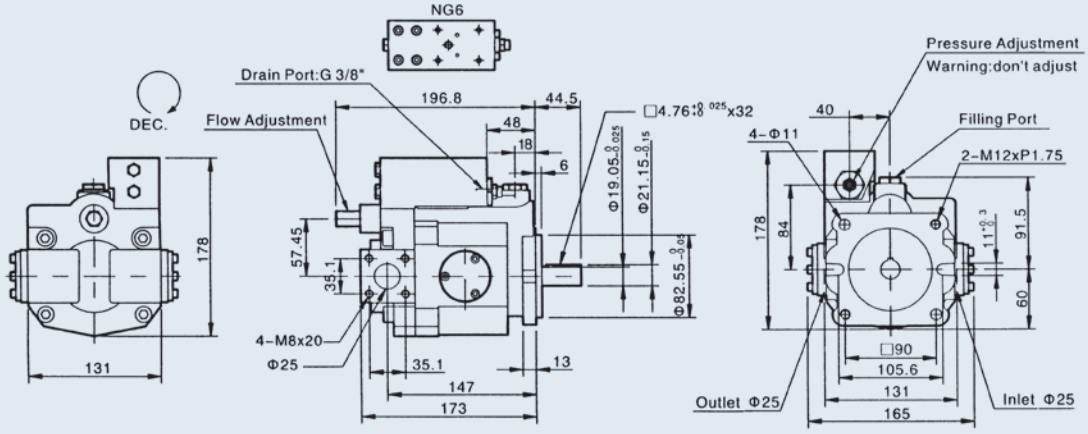

V15HL, V18HL Load-sensing Compensator

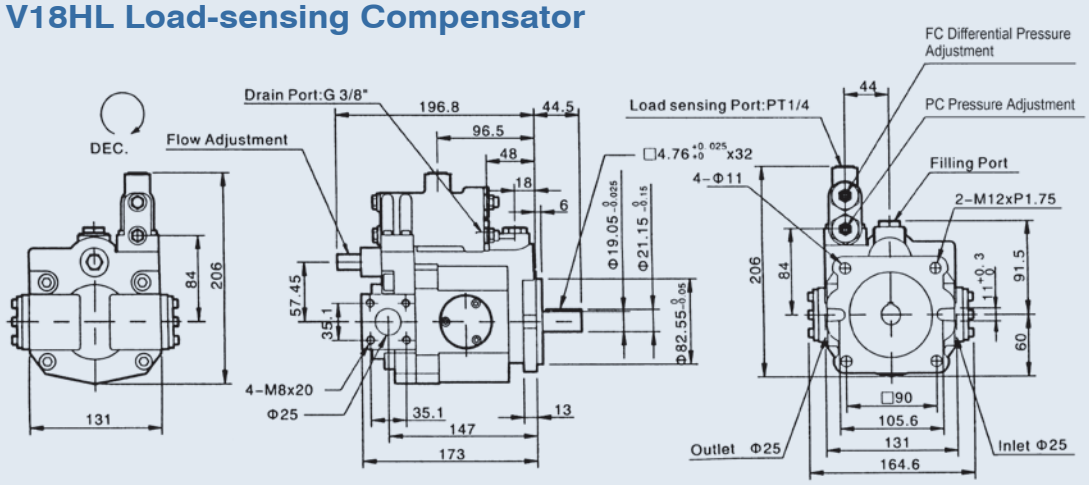

B

V SERIES AXIAL PISTON PUMP

Dimensions

V15HK, V18HK Proportional Electro-hydraulic Load Sensing Type

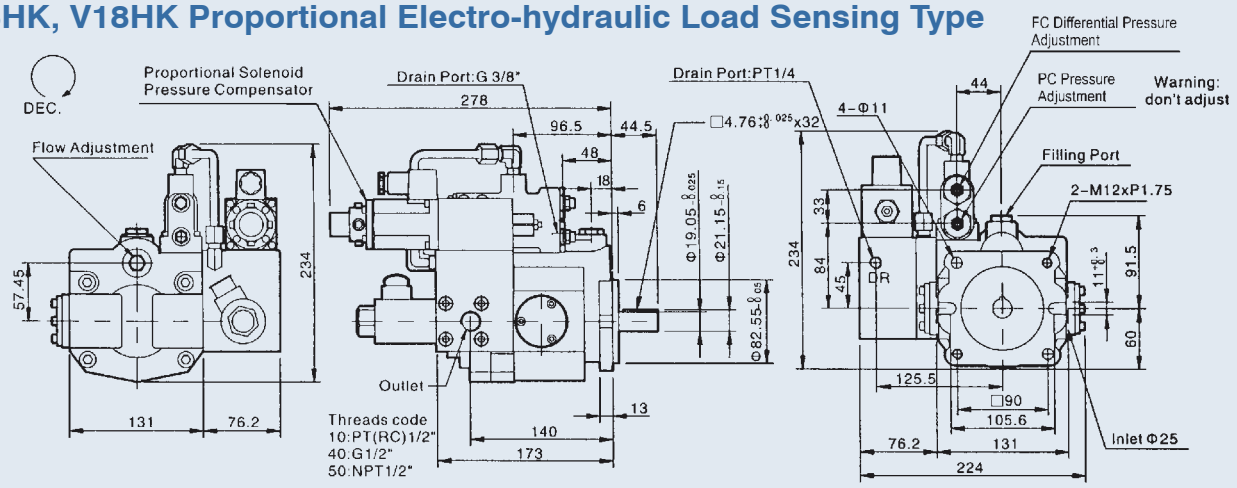

V15HQ, V18HQ Load-sensing Proportional Flow Control

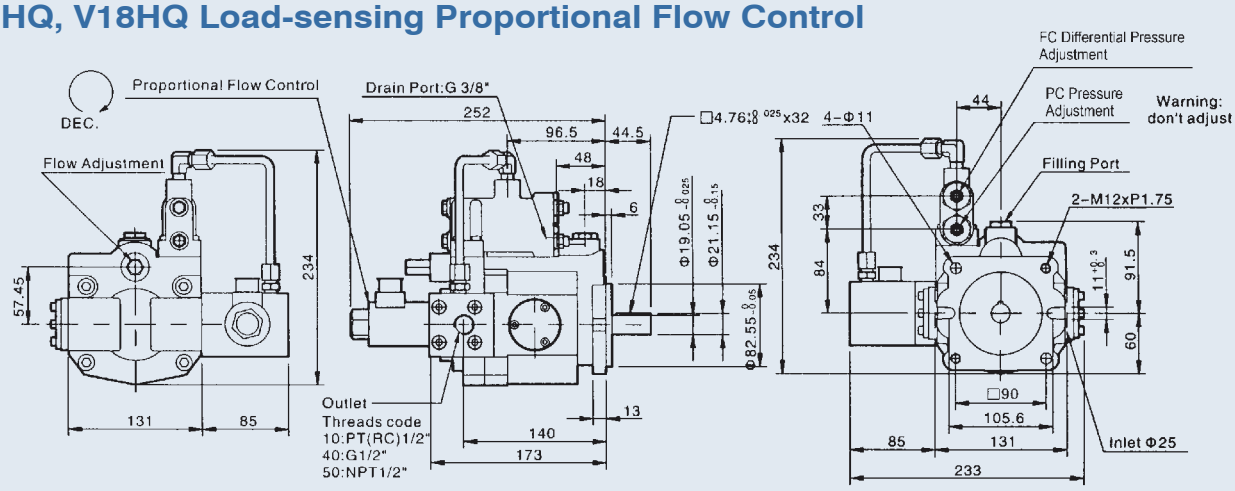

V15, V18 Splined Shaft Type

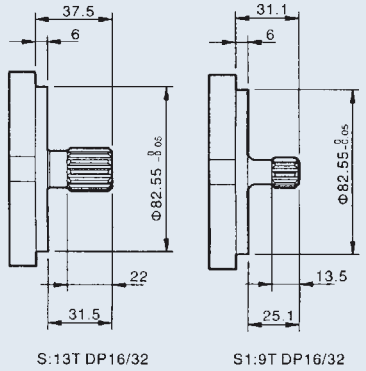

V15, V18 Hydraulic Flange

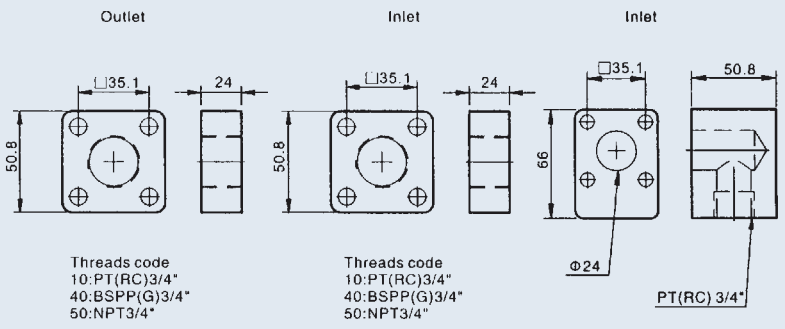

Dimensions

V15, V18 Prepared for Thru Drive (SAE AAø50.8)

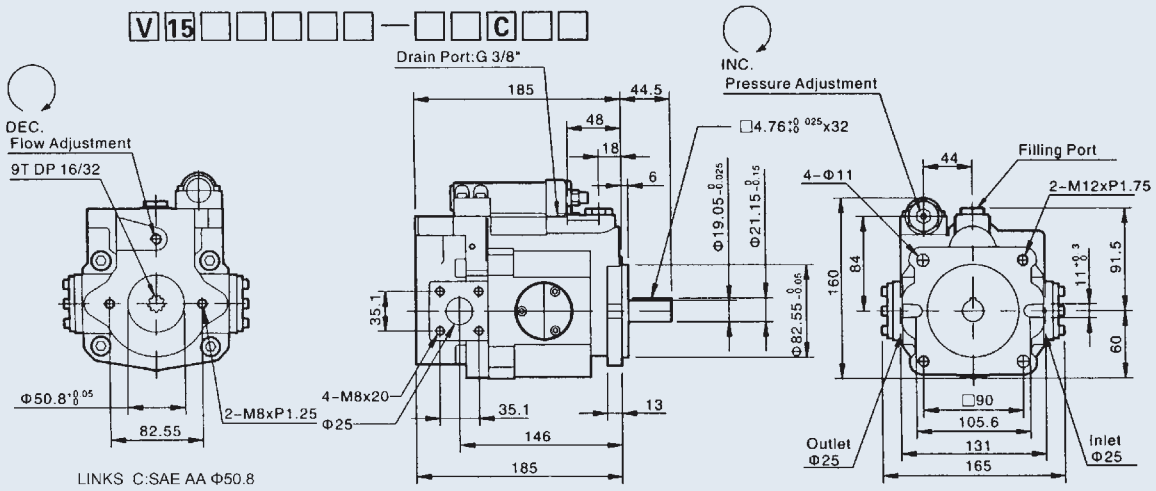

Type	A	B	C	CG	D	DG	E	EG	F	FG	G	GJ	GM	HL	HK	HQ
	O				O	O	O	O			O	O	O	O	O	O

Thru Drive Option

V15, V18 Prepared for Thru Drive (SAE Aø82.55)

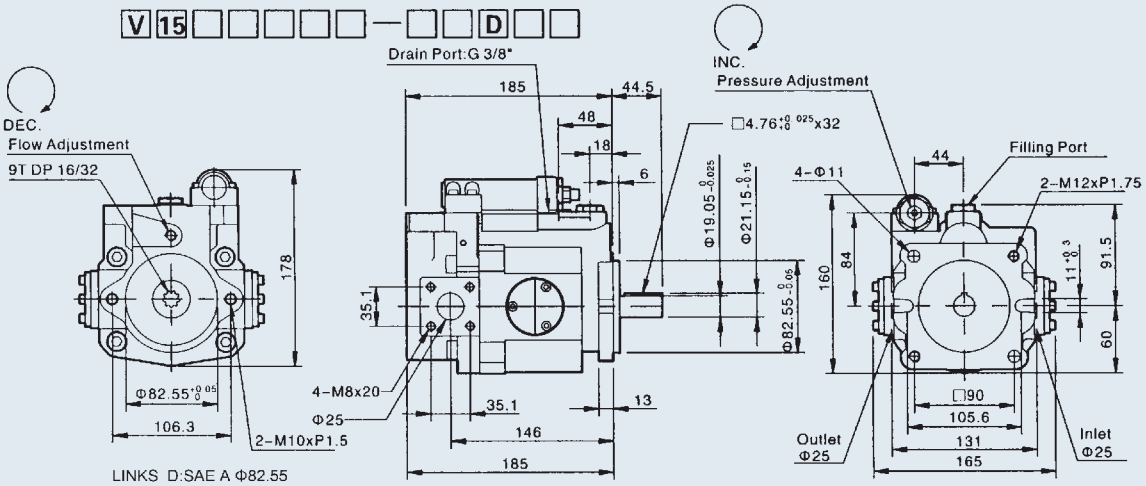

Type	A	B	C	CG	D	DG	E	EG	F	FG	G	GJ	GM	HL	HK	HQ
	O				O	O	O	O			O	O	O	O	O	O

Thru Drive Option

V SERIES AXIAL PISTON PUMP

Dimensions

V23A, V25A Pressure Compensator

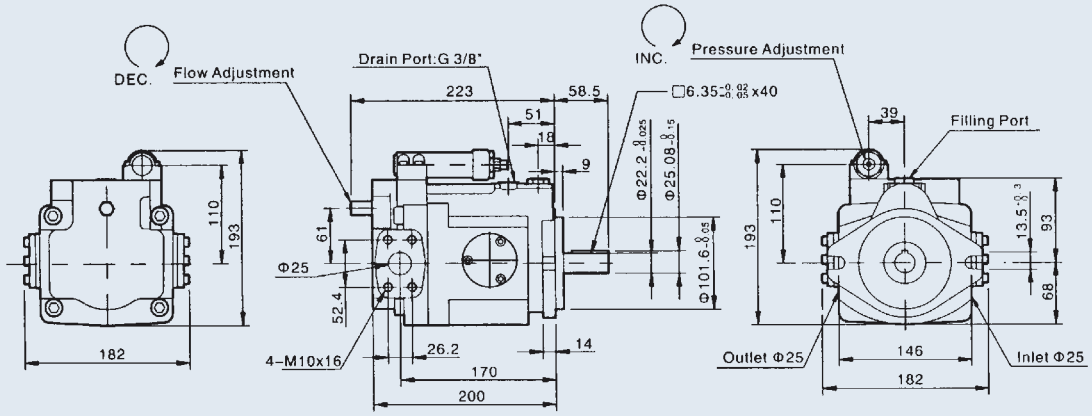

V23B, V25B Multi-stage Flow & Single-stage Pressure Compensator Control (With Cylinder)

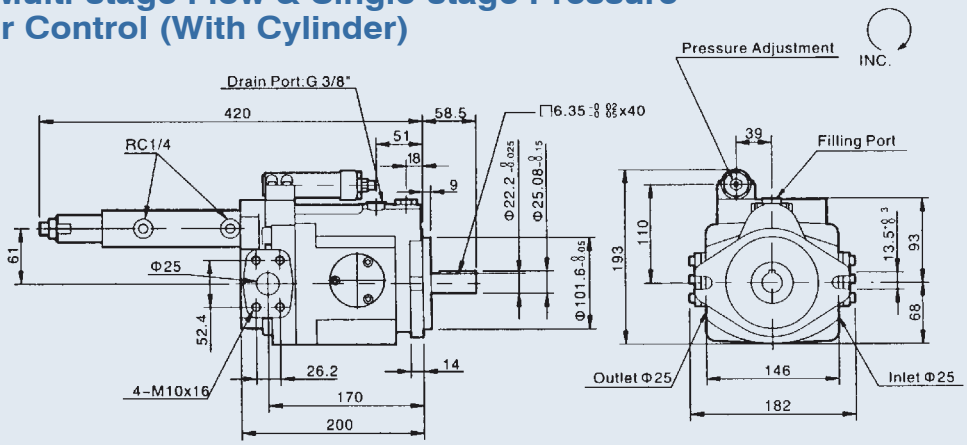

V23C, V25C 2-stage Pressure & Flow Control Type

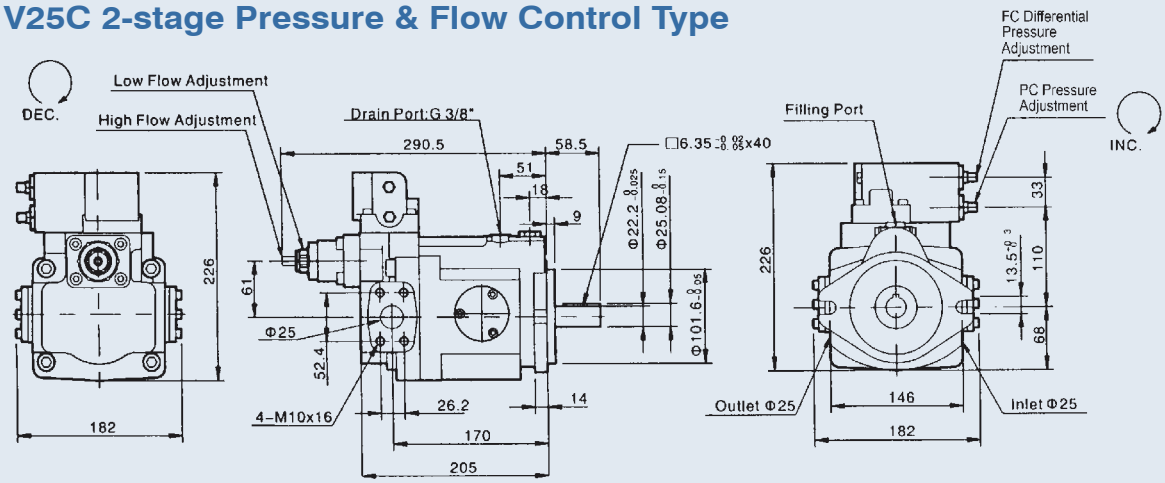

V SERIES AXIAL PISTON PUMP

Dimensions

V23CG, V25CG 2-stage Pressure & Flow Control Type with Remote

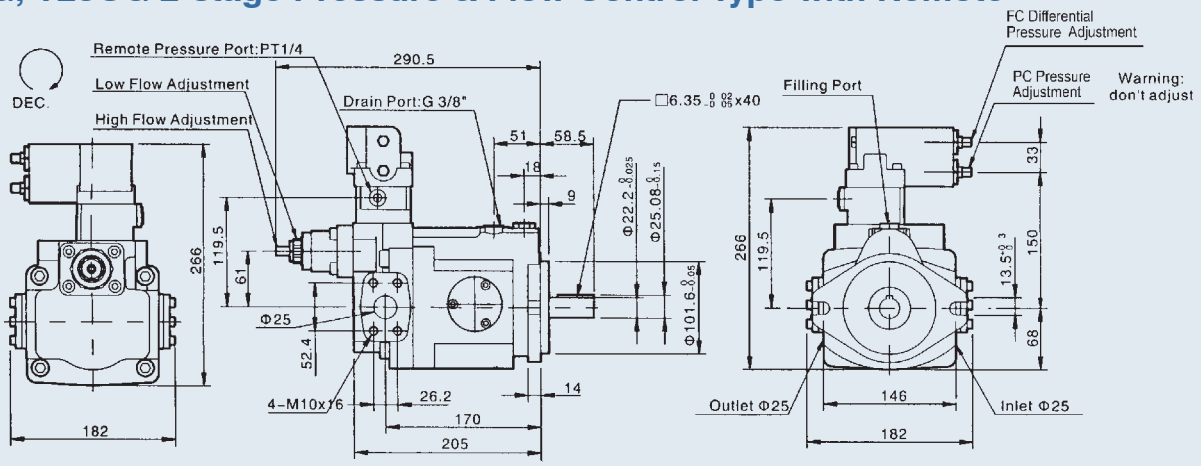

V23D, V25D Solenoid Controlled Pressure Compensating Type with Unloading Device

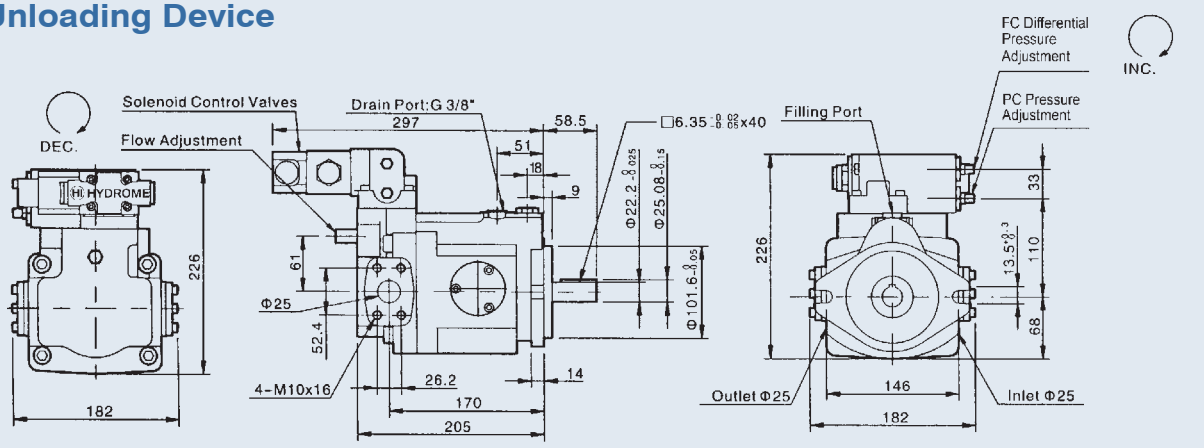

V23DG, V25DG Solenoid Controlled Pressure Compensating Type with Unloading Device & Remote

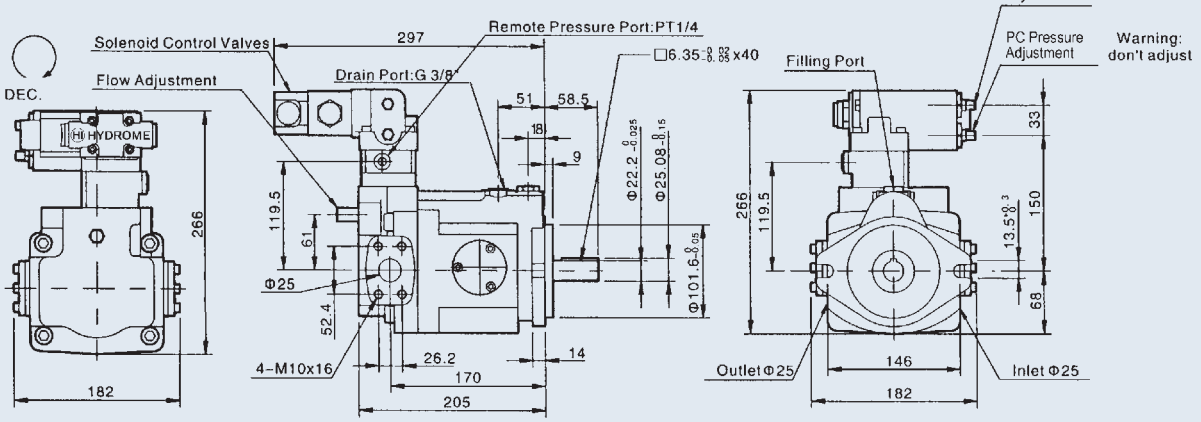

B

V SERIES AXIAL PISTON PUMP

Dimensions

V23E, V25E Dual Pressure Control

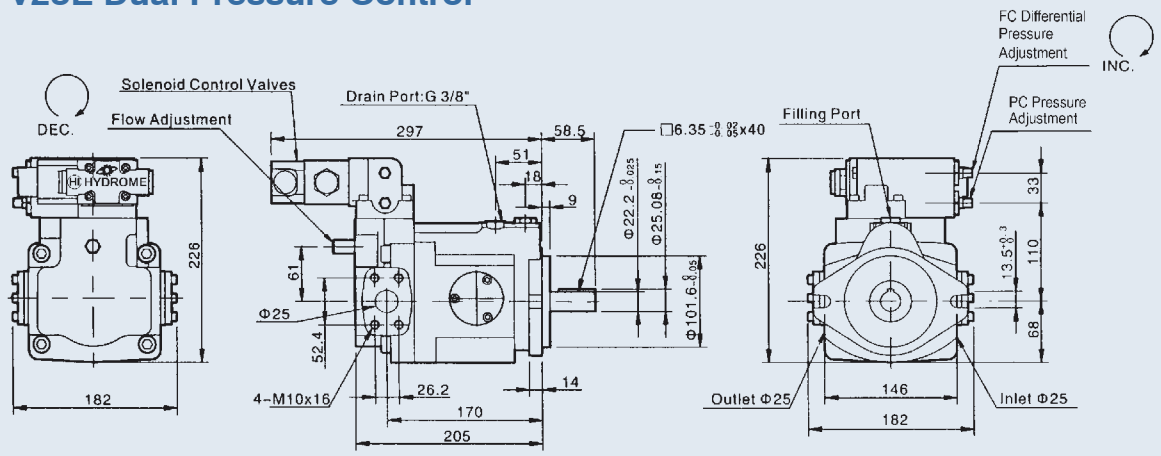

V23EG, V25EG Dual & Remote Pressure Control

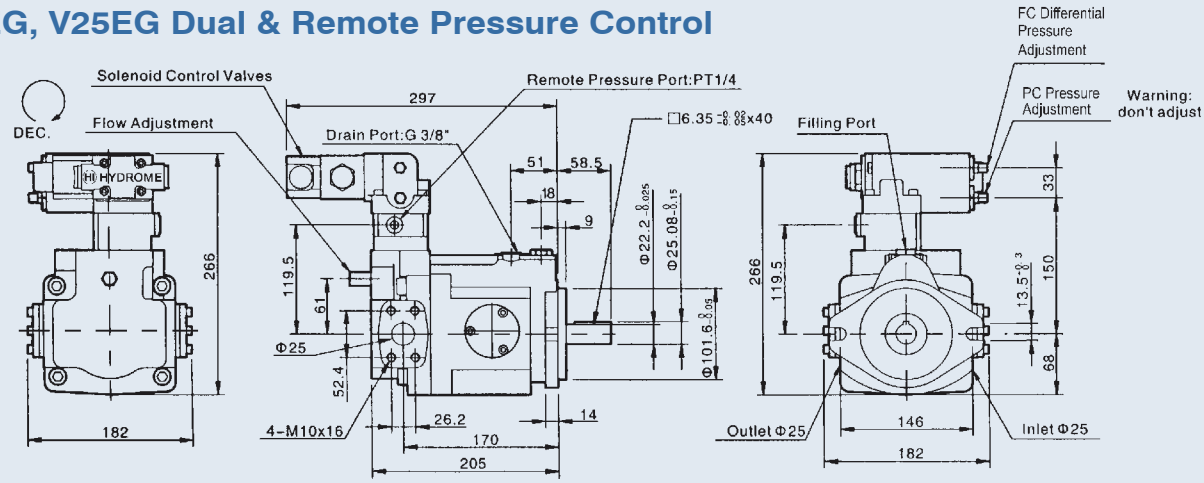

V23F, V25F 2 Flow-2 Pressure Control by Solenoid Operated Valve

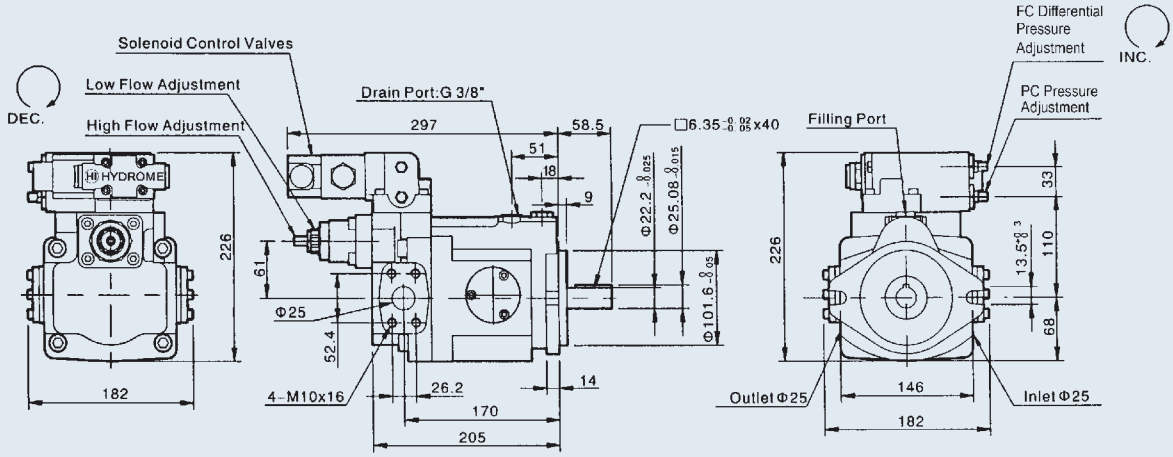

V SERIES AXIAL PISTON PUMP

Dimensions

V23FG, V25FG 2 Flow-2 Pressure Control by Solenoid Operated & Remote Valve

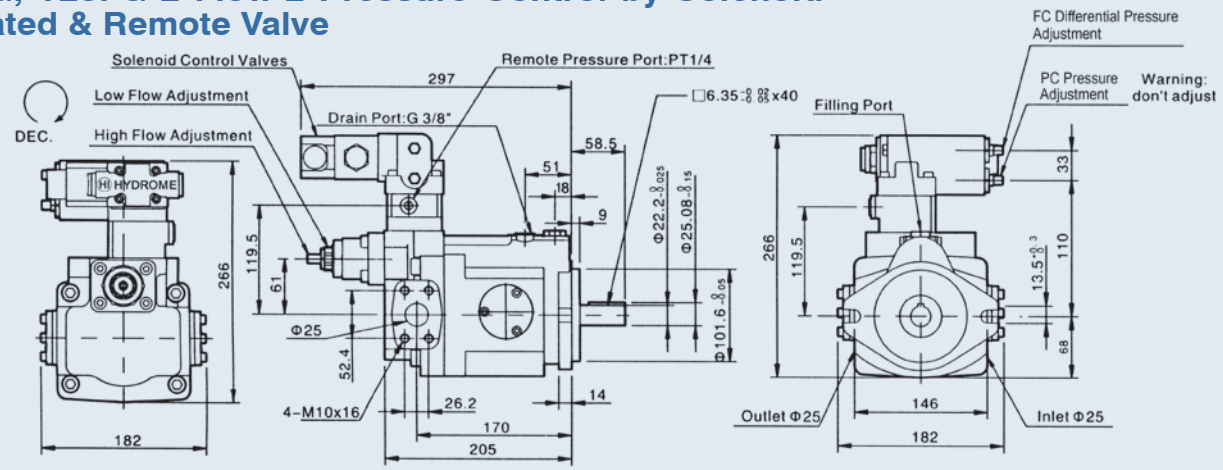

V23G, V25G Remoted Pressure Compensator Control

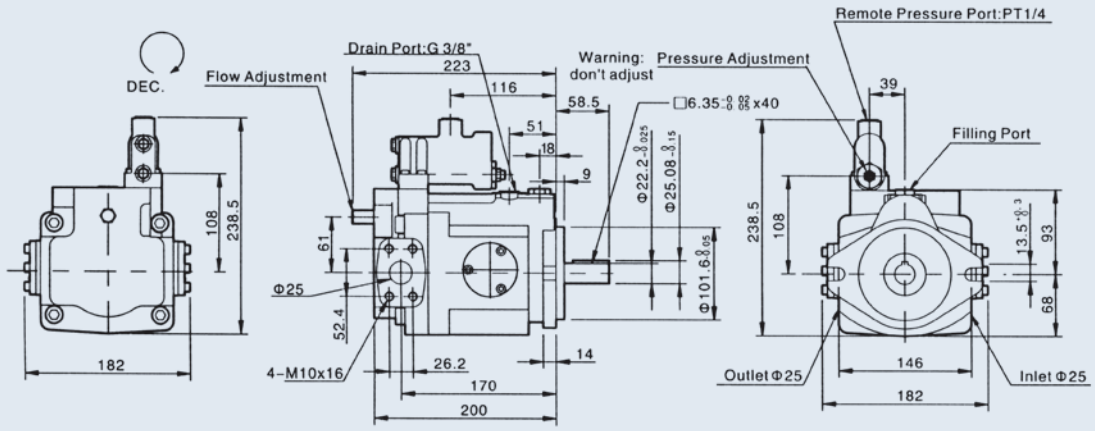

V23GJ, V25GJ Proportional Pressure with interface

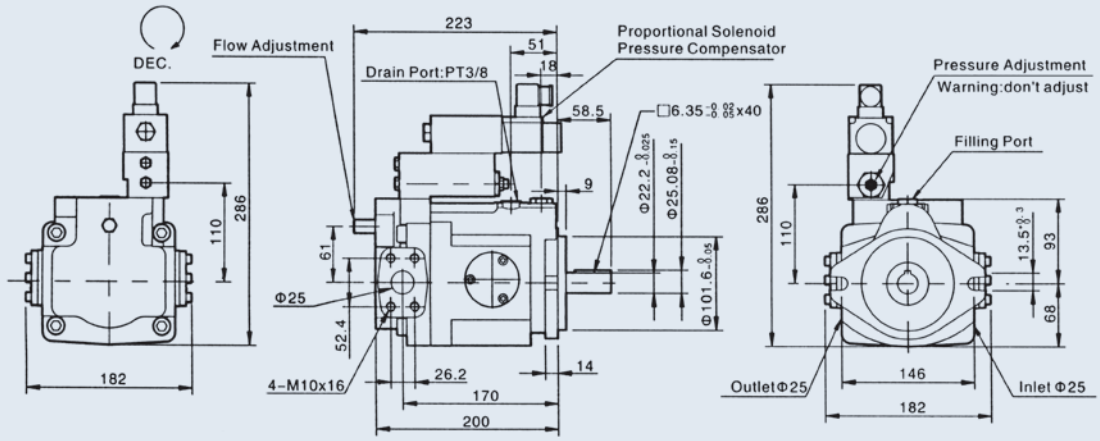

V SERIES AXIAL PISTON PUMP

Dimensions

V23GM, V25GM Remoted Interface (Not include valve)

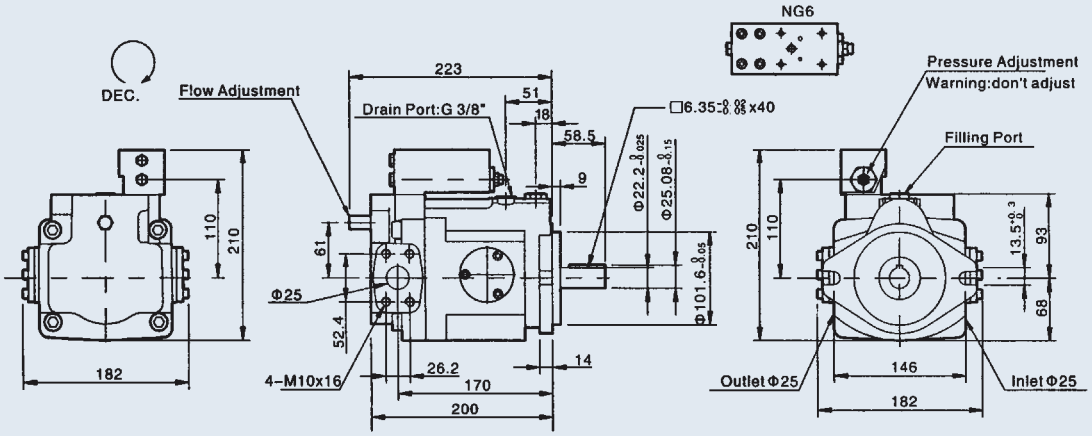

V23HL, V25HL Load-Sensing Compensator

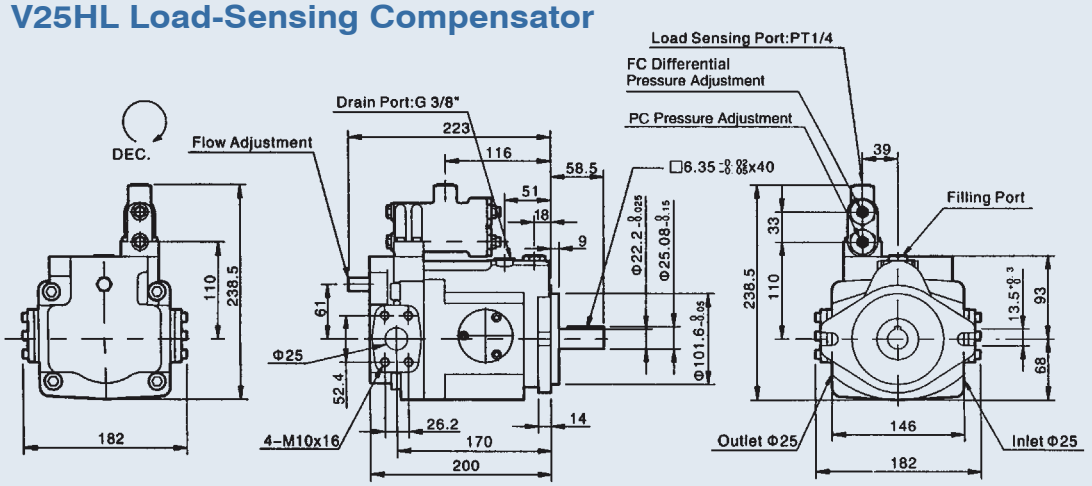

V23HK, V25HK Proportional Electro-hydraulic Load Sensing Type

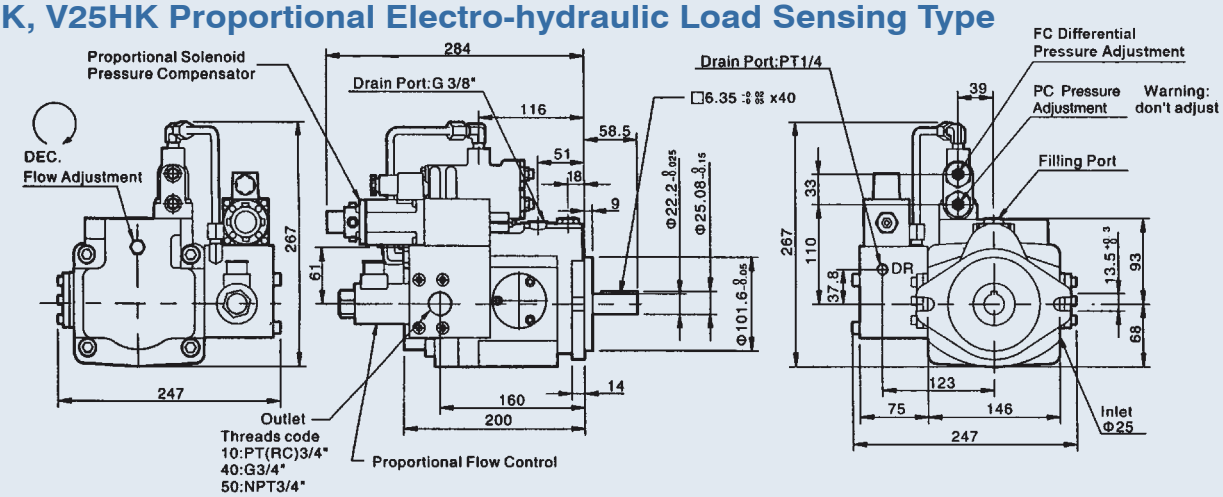

V SERIES AXIAL PISTON PUMP

Dimensions

V23HQ, V25HQ Load-Sensing Proportional Flow Control

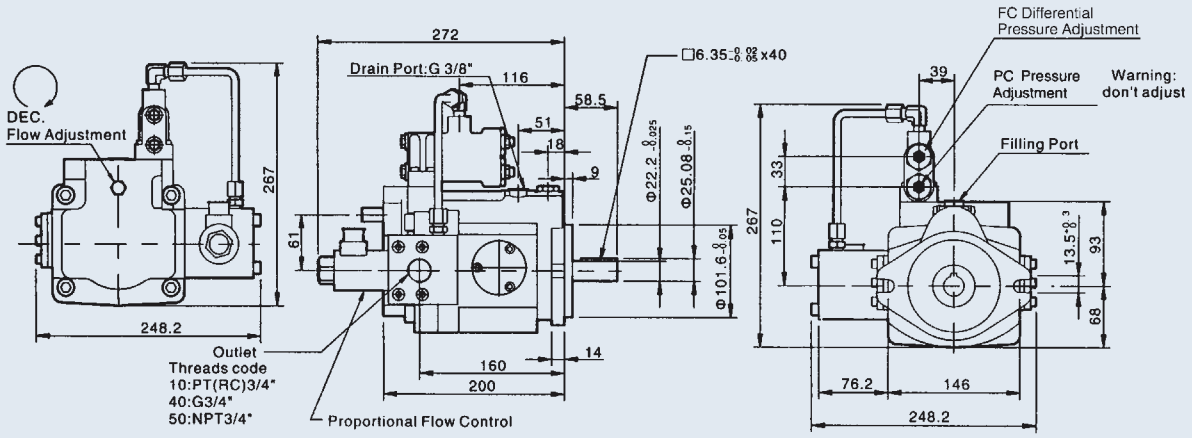

V23, V25 Prepared for Thru Drive (SAE Aø82.55)

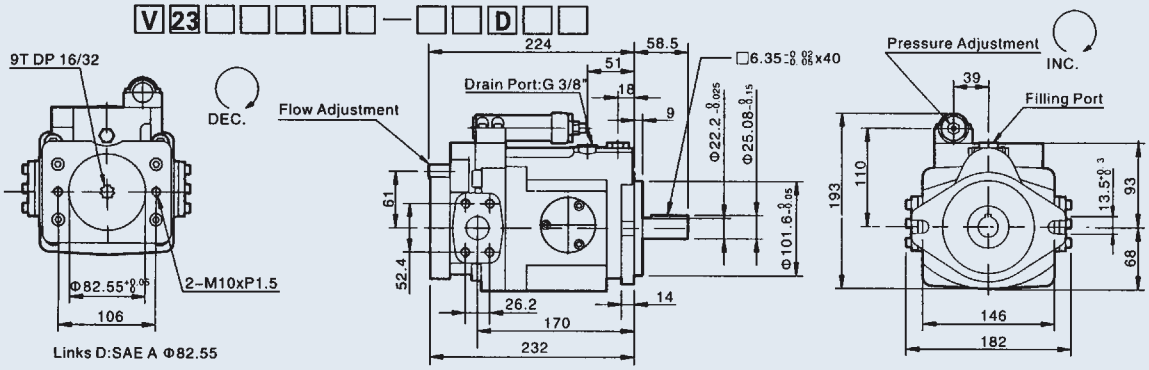

V23, V25 Prepared for Thru Drive (SAE Bø101.6)

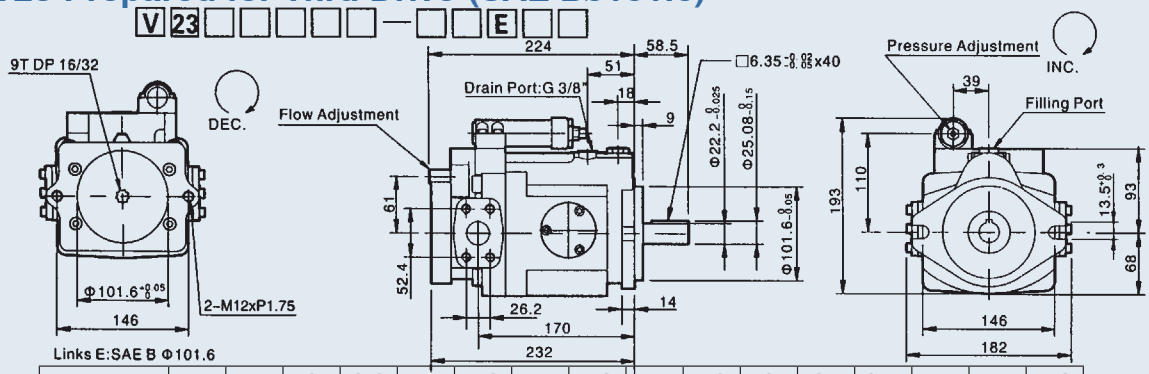

Type	A	B	C	CG	D	DG	E	EG	F	FG	G	GJ	GM	HL	HK	HQ
	O				O	O	O	O			O	O	O	O	O	O

Thru Drive Option

V SERIES AXIAL PISTON PUMP

Dimensions

V23, V25 Axial Port

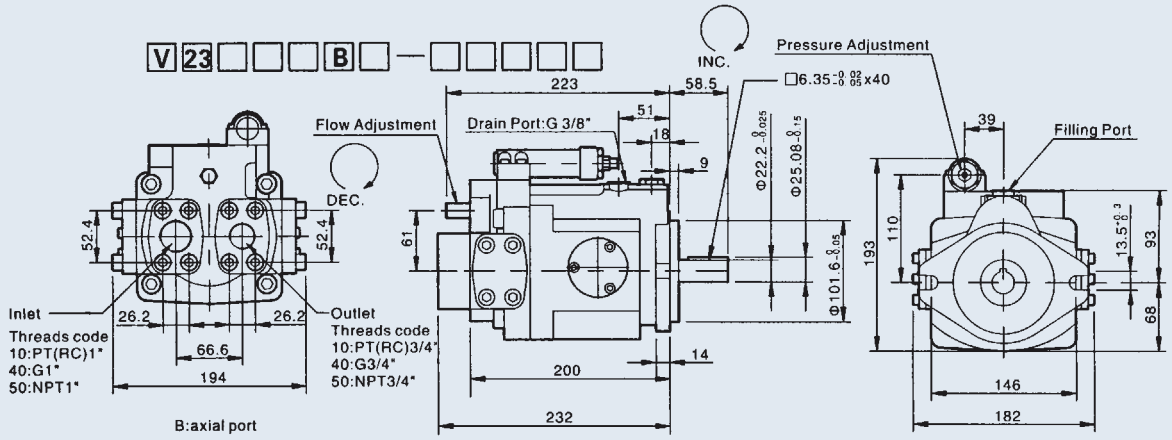

V23, V25 4 Connections for Axail Port

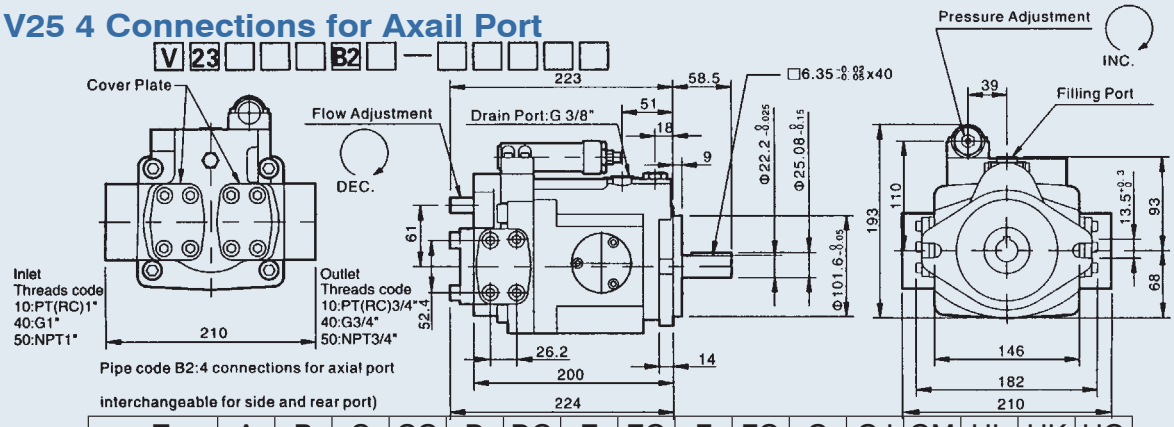

Type	A	B	C	CG	D	DG	E	EG	F	FG	G	GJ	GM	HL	HK	HQ
	O	O									O	O	O	O		

Axial Port Option

V23, V25 Splined Shaft Type

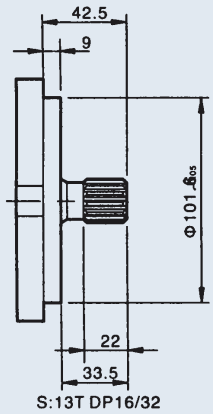

V23, V25 Hydraulic Flange

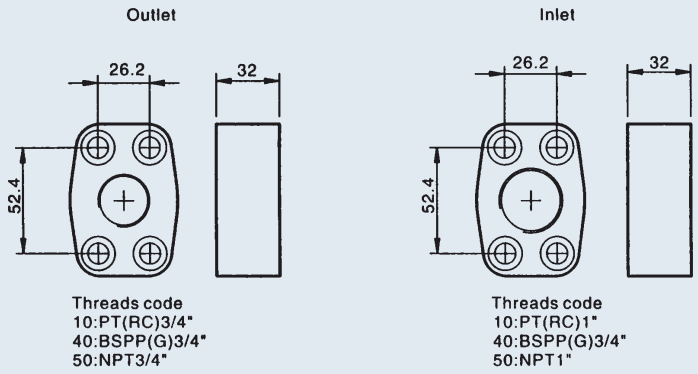

Dimensions

V38A, V42A Pressure Compensator

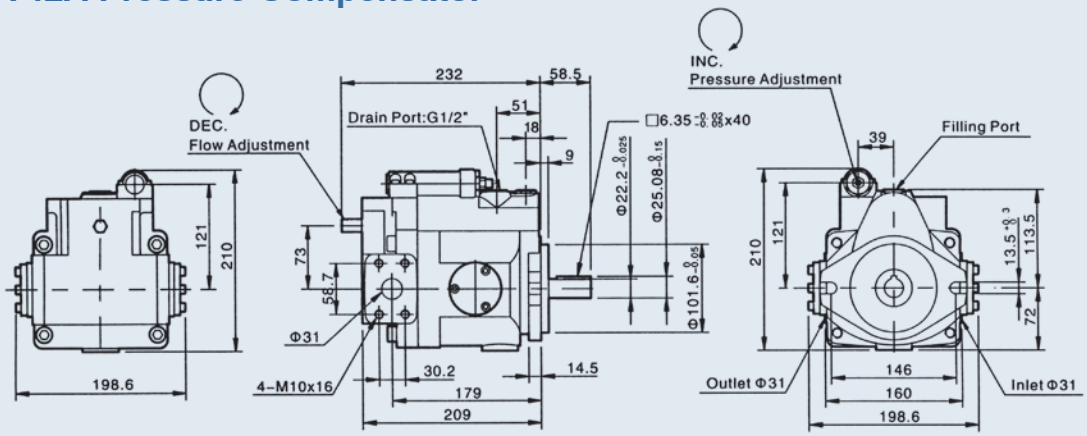

V38B, V42B Multi-stage Flow & Single-stage Pressure Compensator Control (With cylinder)

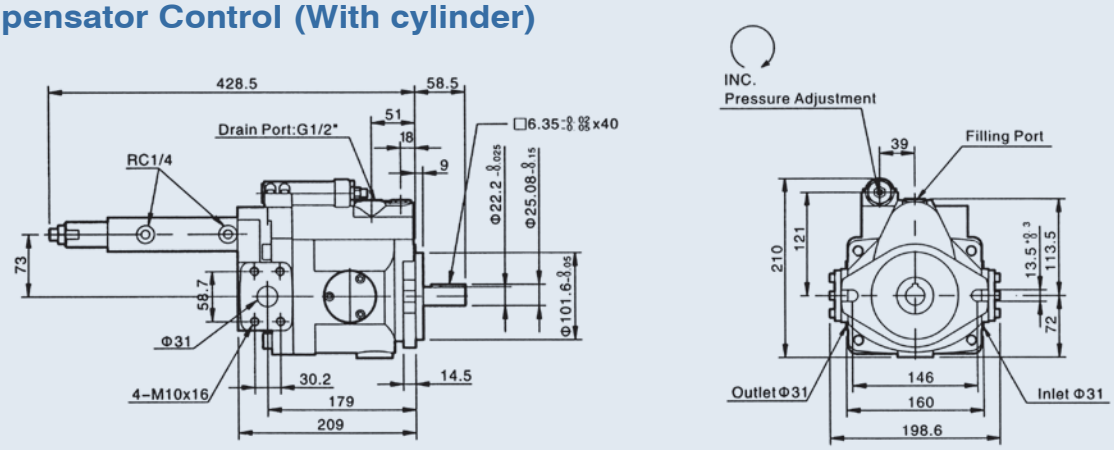

V38C, V42C 2-stage Pressure & Flow Control Type

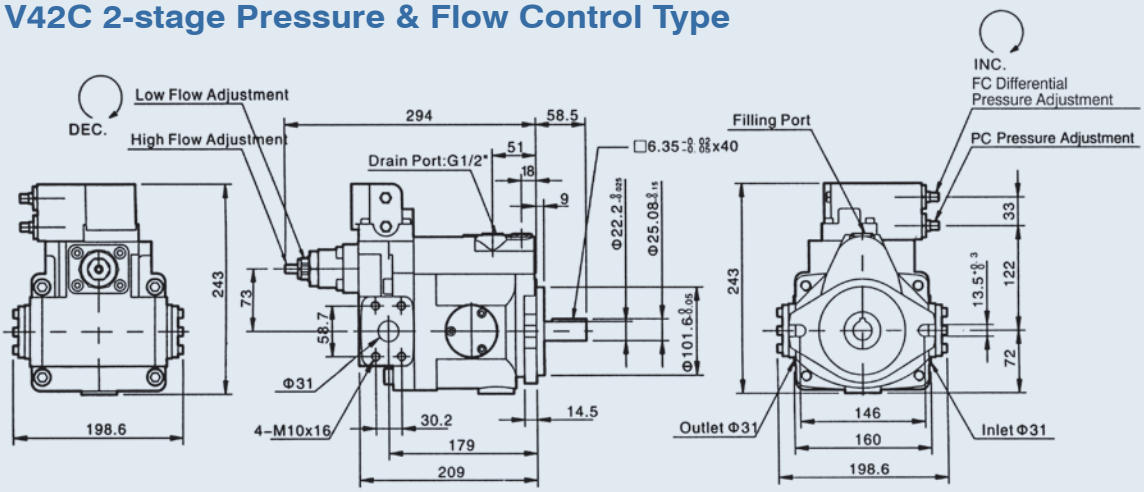

V SERIES AXIAL PISTON PUMP

Dimensions

V38CG, V42CG 2-stage Pressure & Flow Control Type with Remote

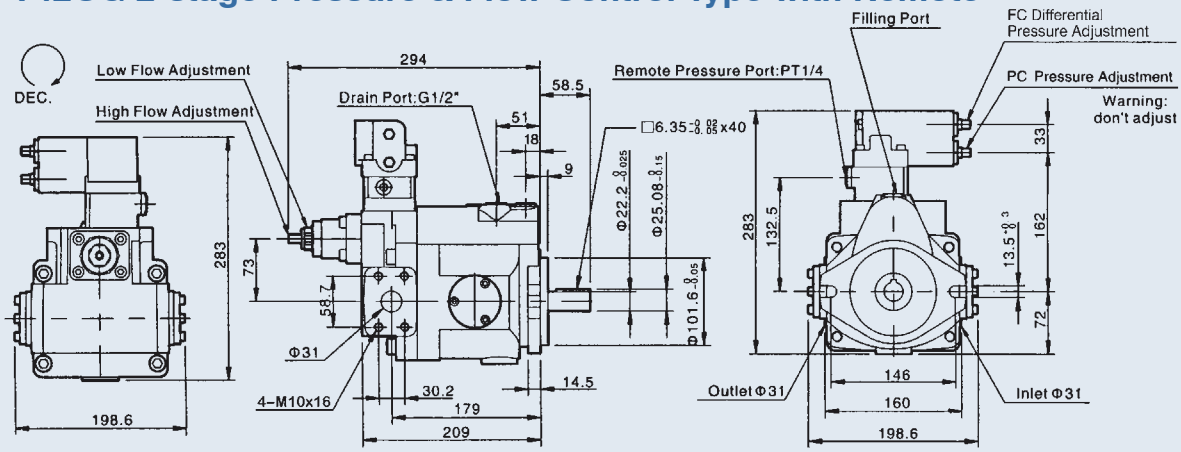

V38D, V42D Solenoid Controlled Pressure Compensating Type with Unloading Device

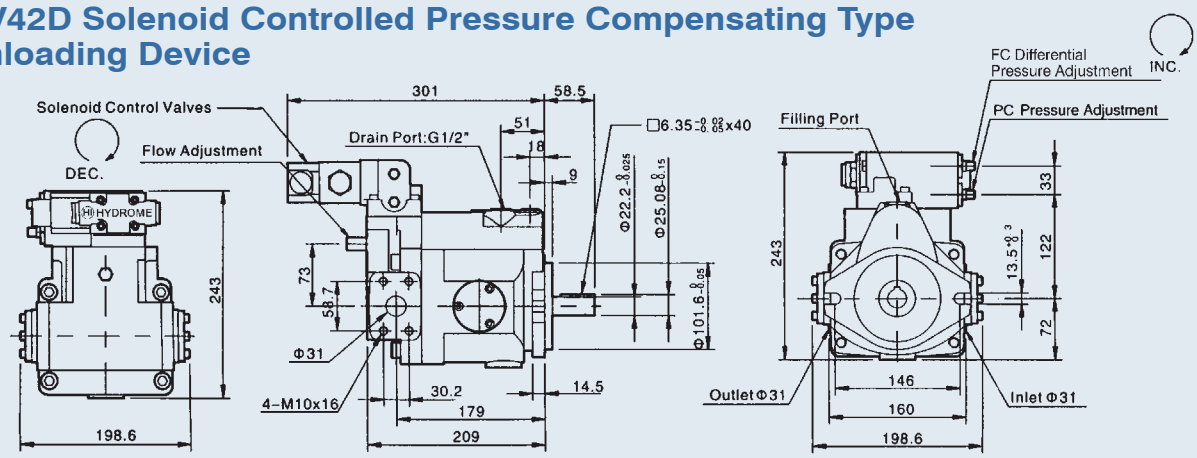

V38DG, V42DG Solenoid Controlled Pressure Compensating Type with Unloading Device & Remote

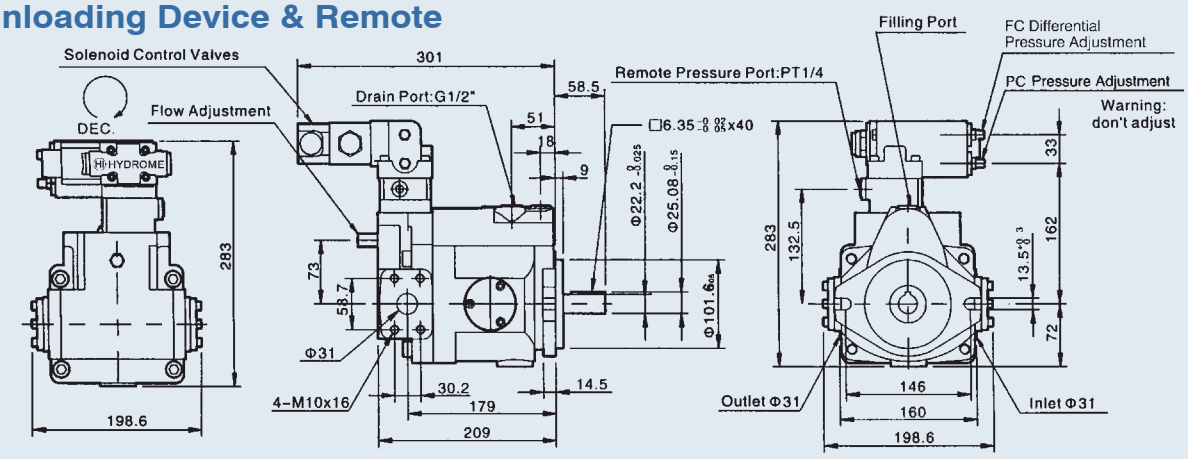

V SERIES AXIAL PISTON PUMP

Dimensions

V38E, V42E Dual Pressure Control

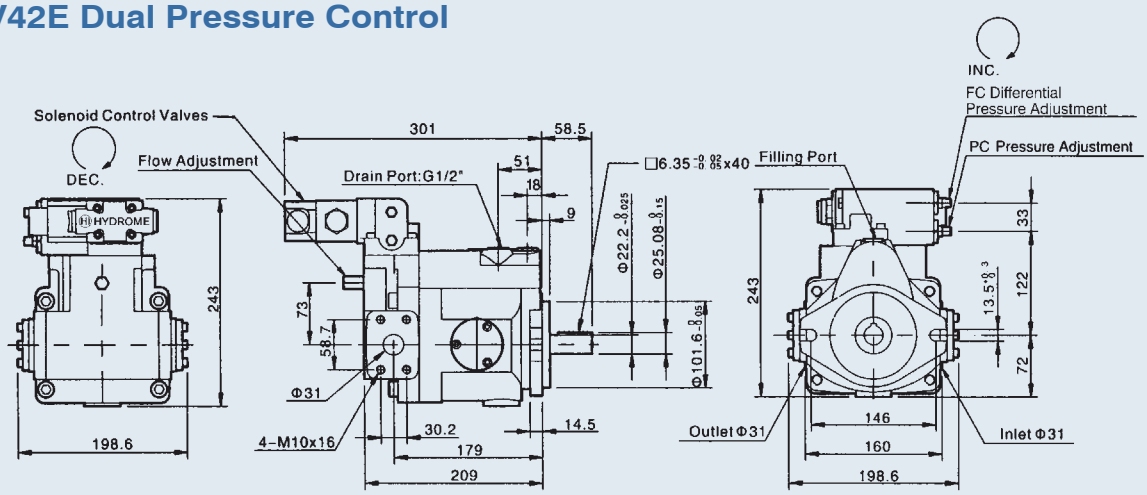

V38EG, V42EG Dual & Remote Pressure Control

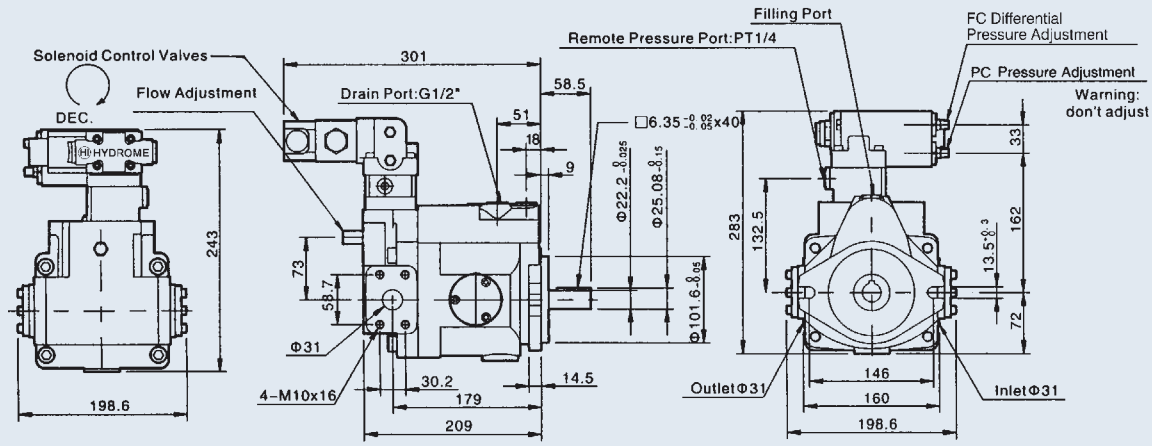

V38F, V42F Flow-2 Pressure Control by Solenoid Operated Valve

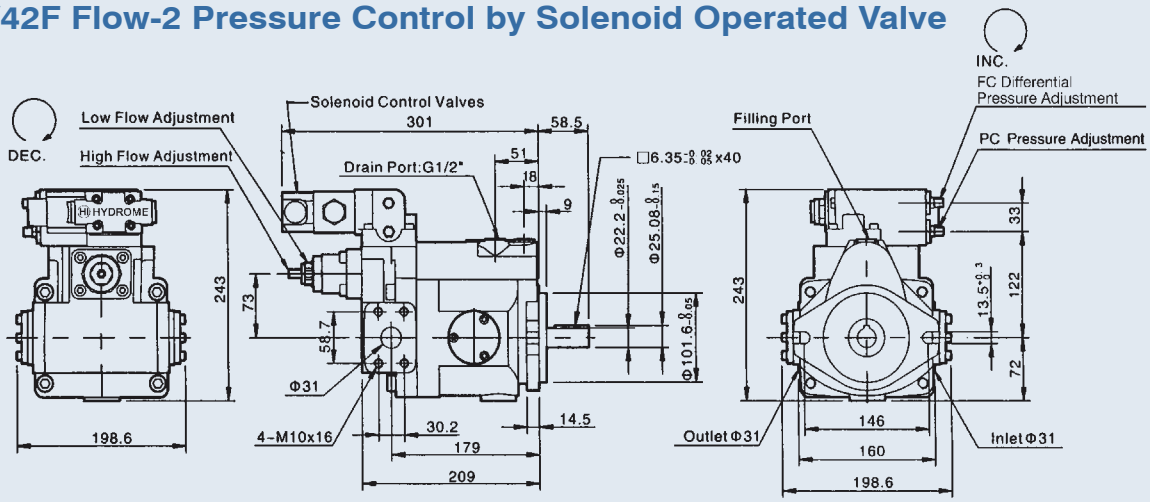

V SERIES AXIAL PISTON PUMP

Dimensions

V38FG, V42FG 2 Flow-2 Pressure Control by Solenoid Operated & Remote Valve

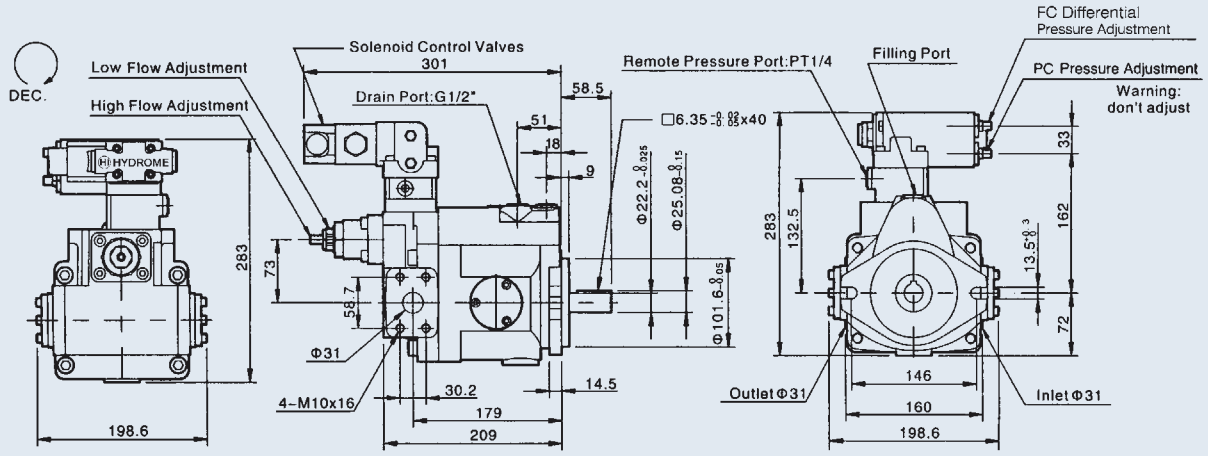

V38G, V42G Remoted Pressure Compensator Control

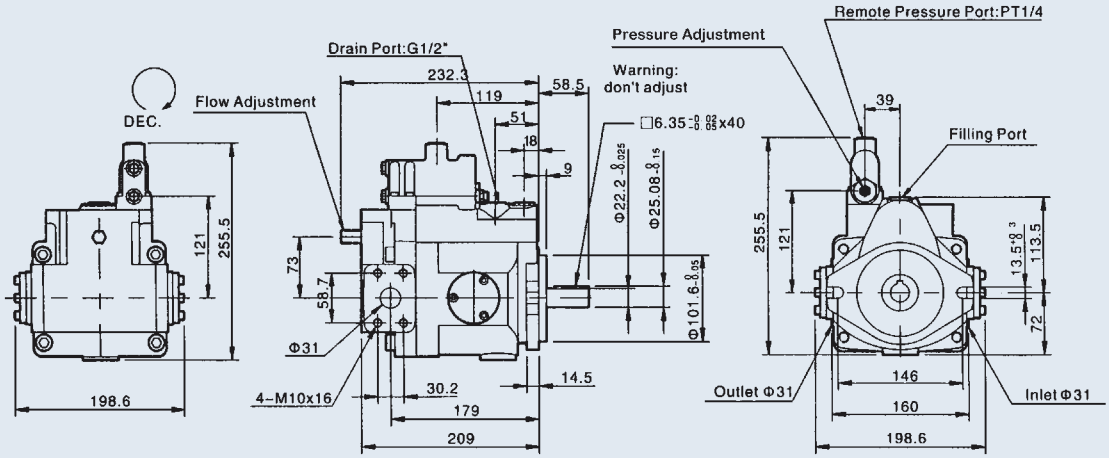

V38GJ, V42GJ Proportional Pressure with Interface

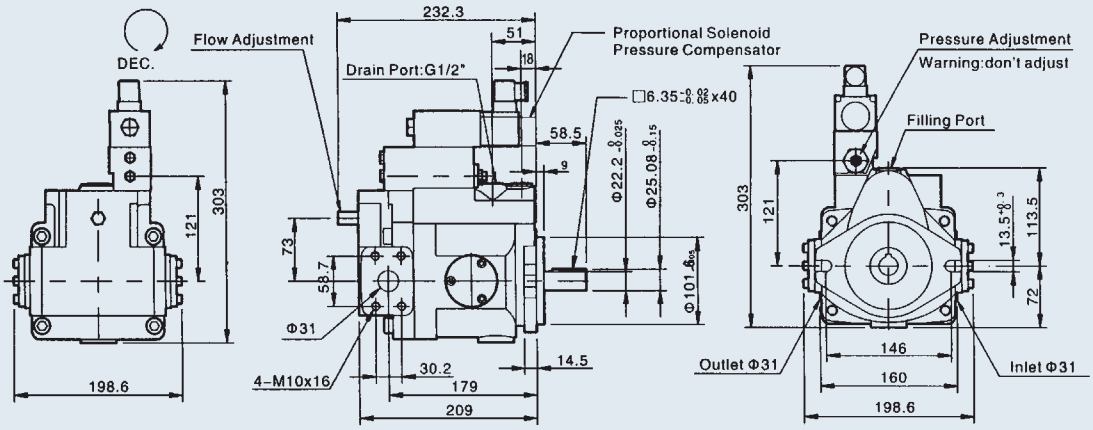

V SERIES AXIAL PISTON PUMP

Dimensions

V38GM, V42GM Remote Interface (Not include valve)

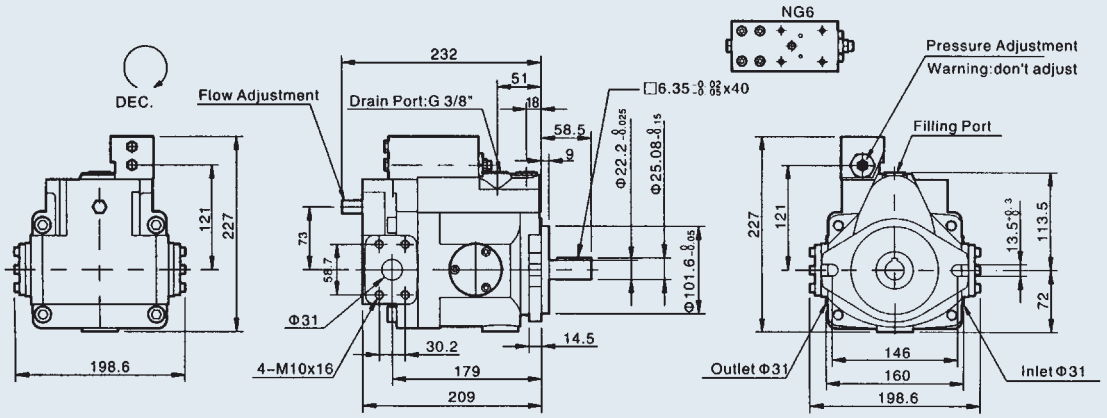

V38HL, V42HL Load-sensing Compensator

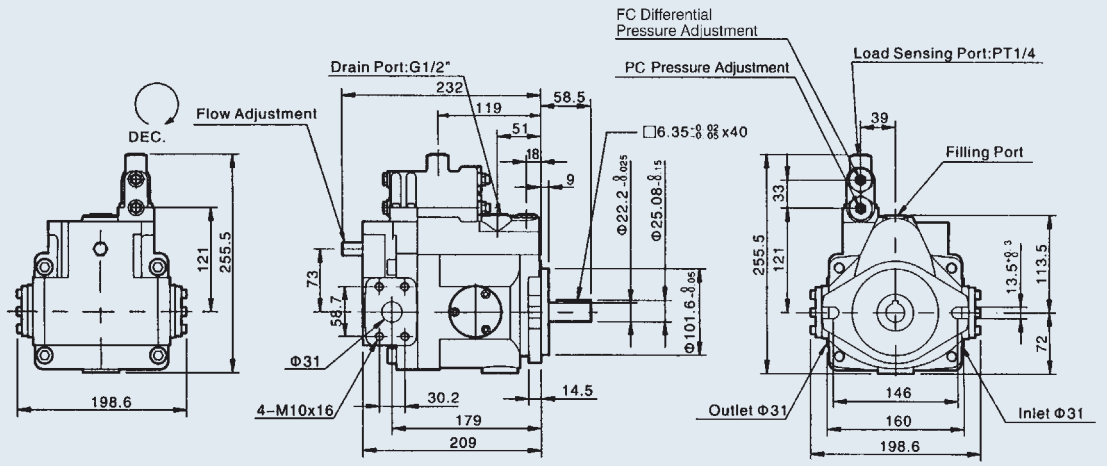

V38HK, V42HK Proportional Electro-hydraulic Load Sensing Type

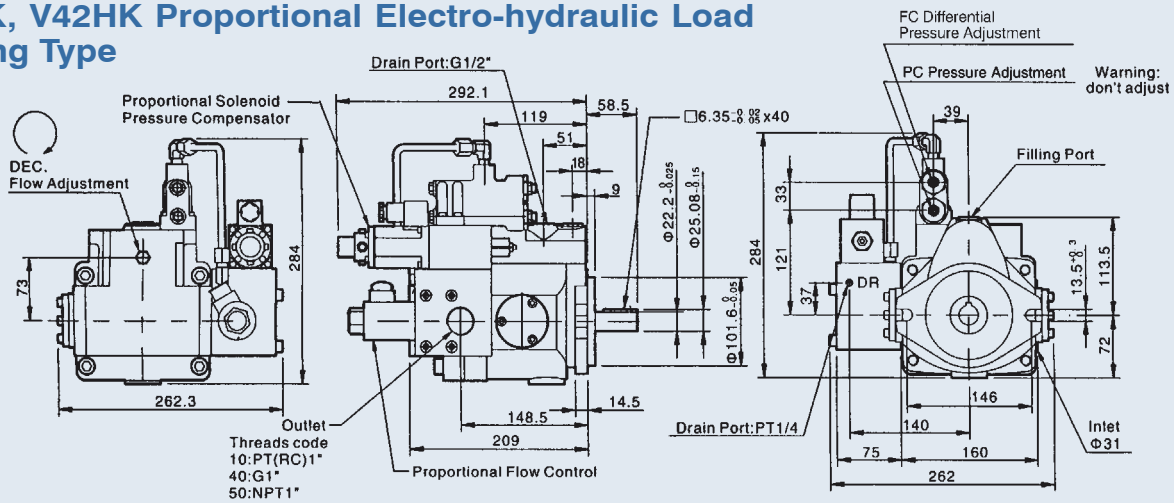

V SERIES AXIAL PISTON PUMP

Dimensions

V38HQ, V42HQ Load-sensing Proportional Flow Control

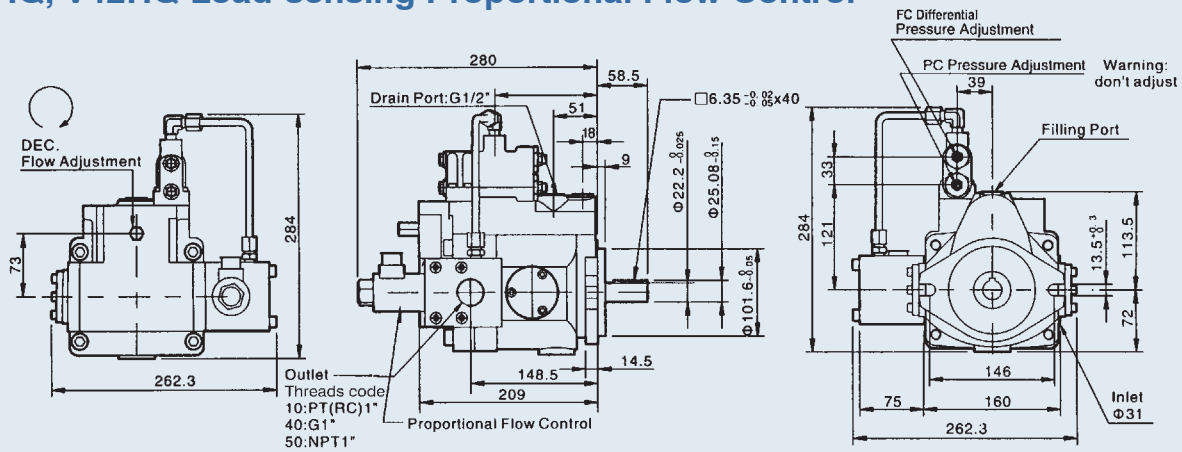

V38, V42 Prepared for Thru Drive (SAE Aø82.55)

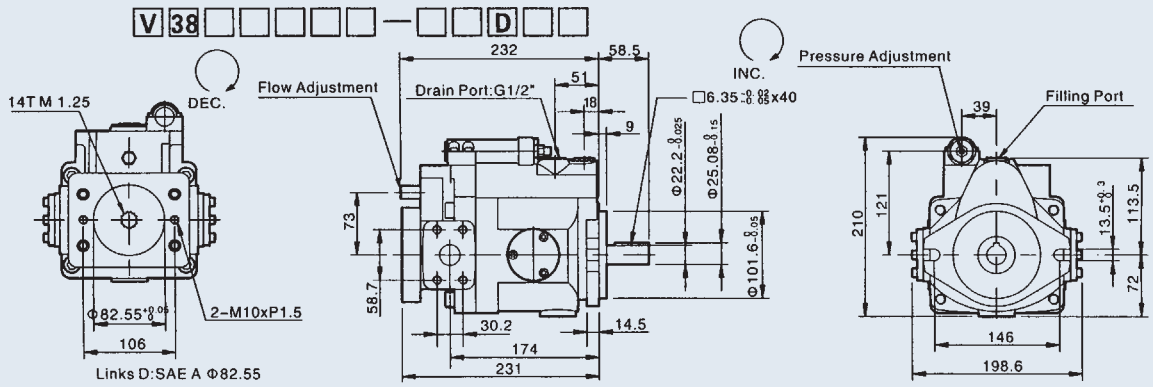

V38, V42 Prepared for Thru Drive (SAE Bø101.6)

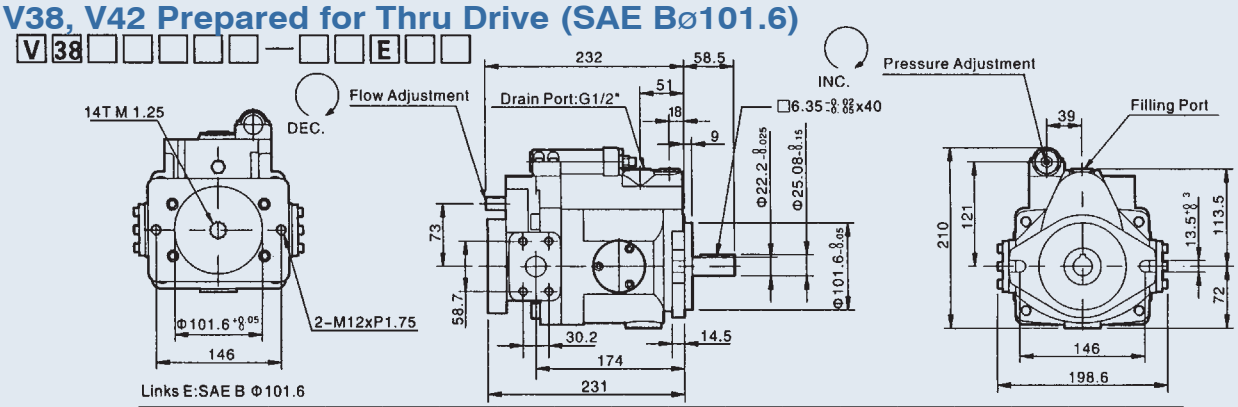

Type	A	B	C	CG	D	DG	E	EG	F	FG	G	GJ	GM	HL	HK	HQ
	O				O	O	O	O			O	O	O	O	O	O

Thru Drive Option

V SERIES AXIAL PISTON PUMP

Dimensions

V38, V42 Axial Port

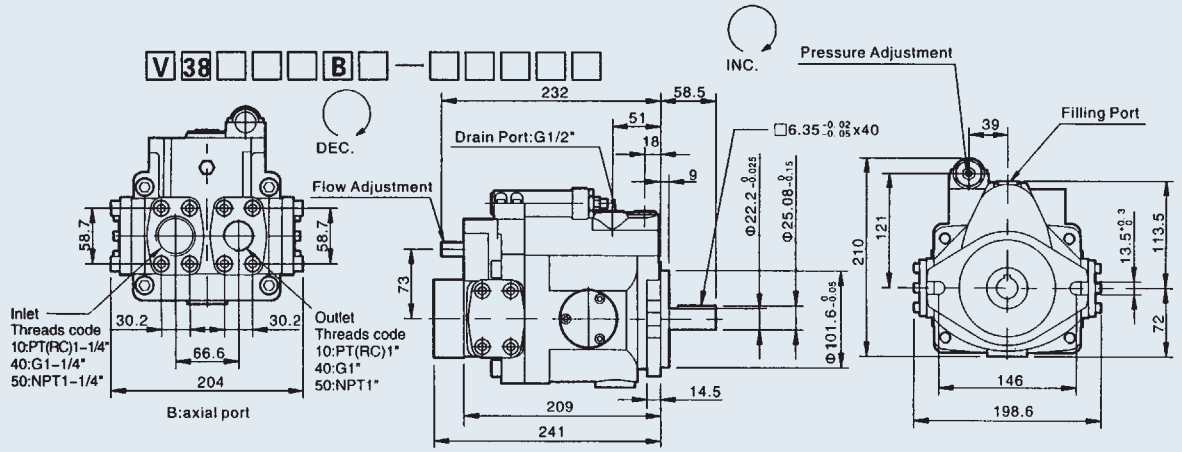

V38, V42 4 Connections for Axial Port

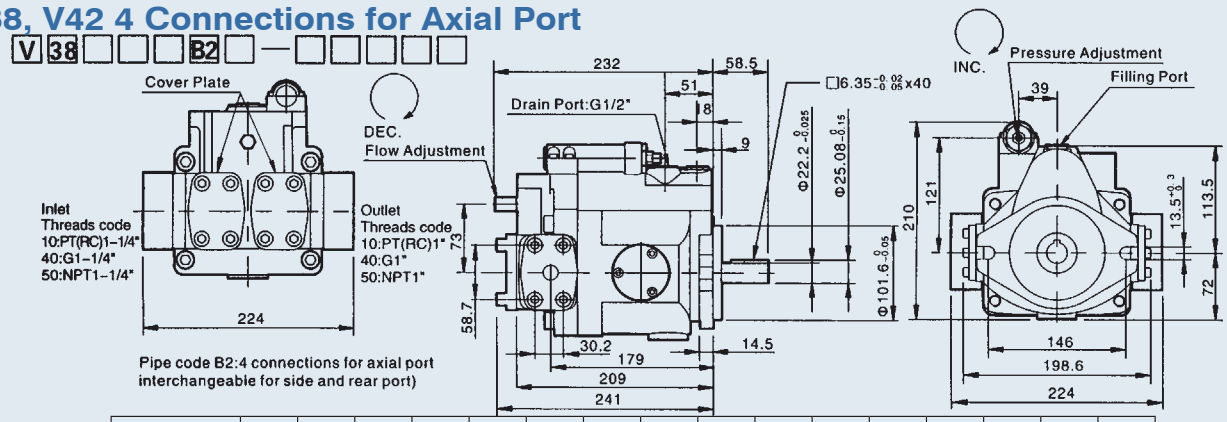

Type	A	B	C	CG	D	DG	E	EG	F	FG	G	GJ	GM	HL	HK	HQ
	O	O	O	O					O	O	O	O	O	O		

Axial Port Option

V38, V42 Splined Shaft Type

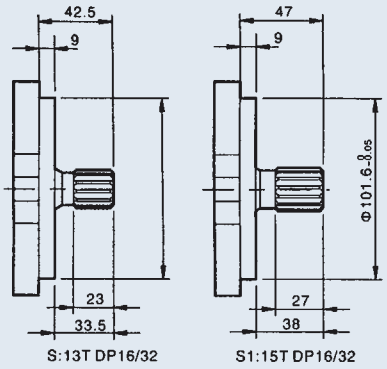

V38, V42 Hydraulic Flange

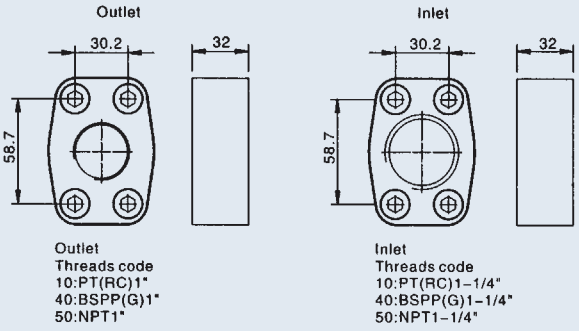

V SERIES AXIAL PISTON PUMP

Dimensions

V50A, V70A Pressure Compensator

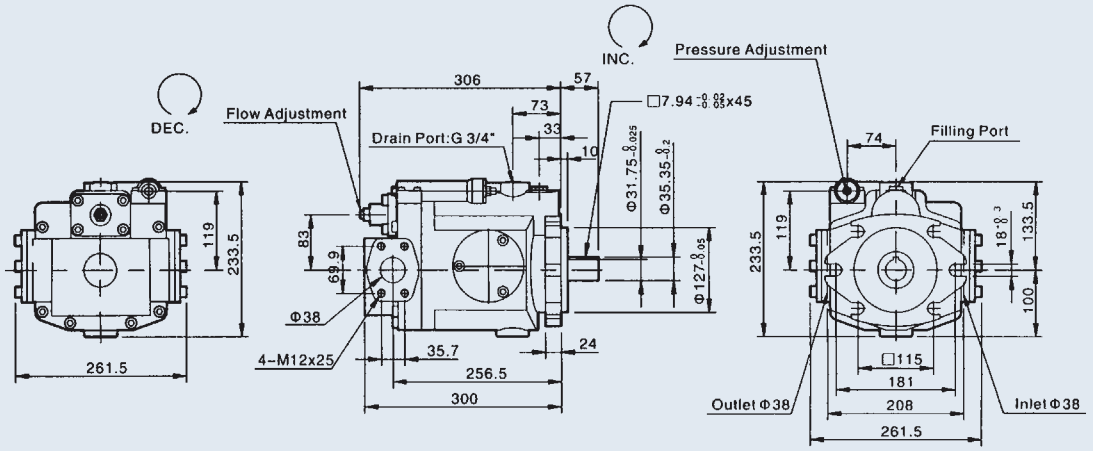

V50B, V70B Multi-stage Flow & Single-stage Pressure Compensator Control (With cylinder)

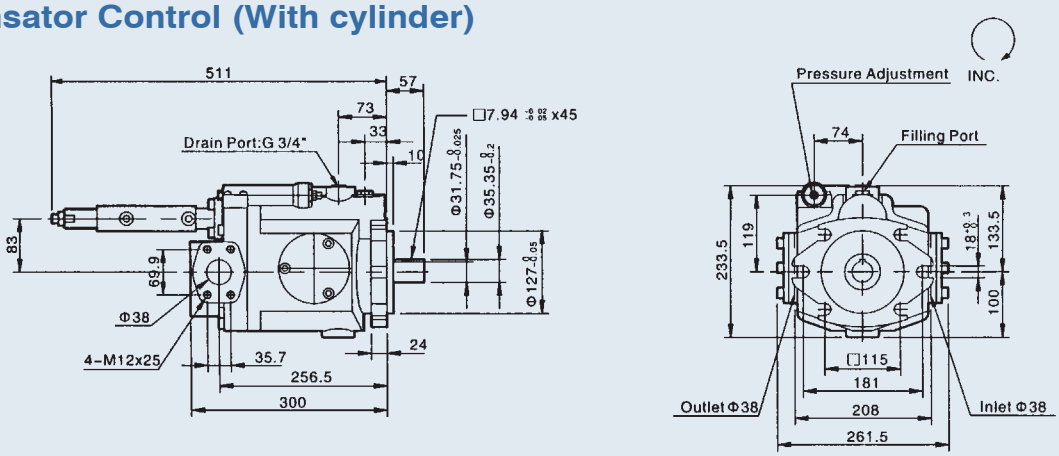

V50C, V70C 2-stage Pressure & Flow Control Type

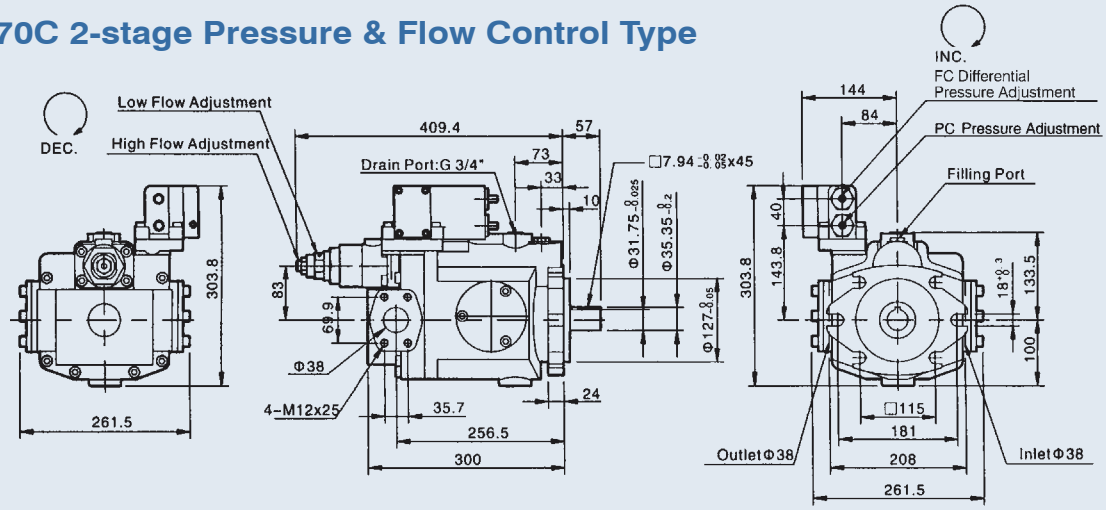

V SERIES AXIAL PISTON PUMP

Dimensions

V50D, V70D Solenoid Controlled Pressure Compensating Type with Unloading Device

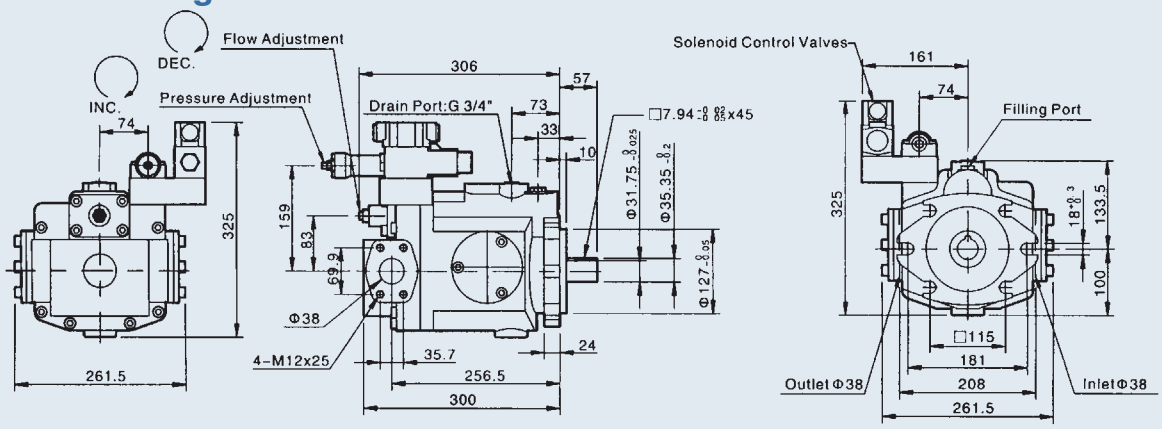

V50F, V70F 2 Flow-2 Pressure Control by Solenoid Operated Valve

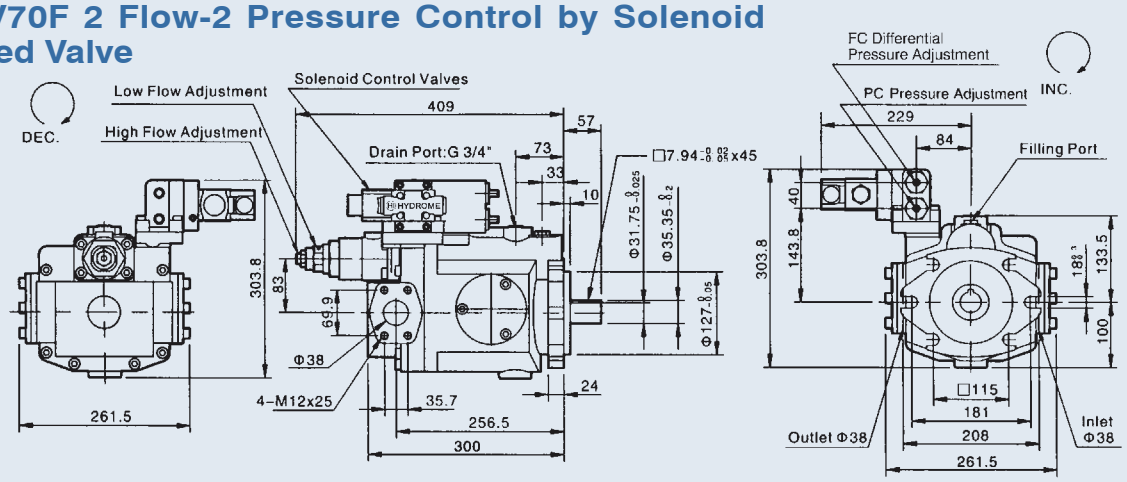

V50G, V70G Remoted Pressure Compensator Control

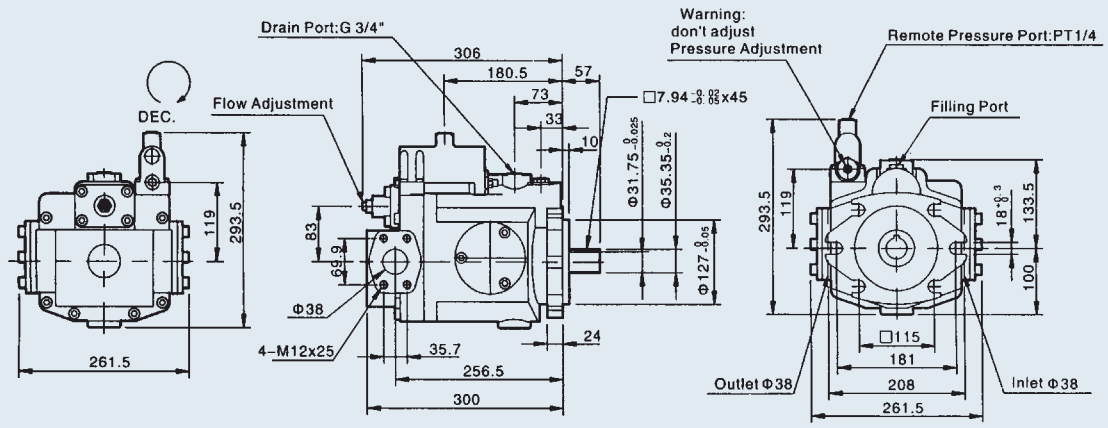

V SERIES AXIAL PISTON PUMP

Dimensions

V50GJ, V70GJ Proportional Pressure with interface

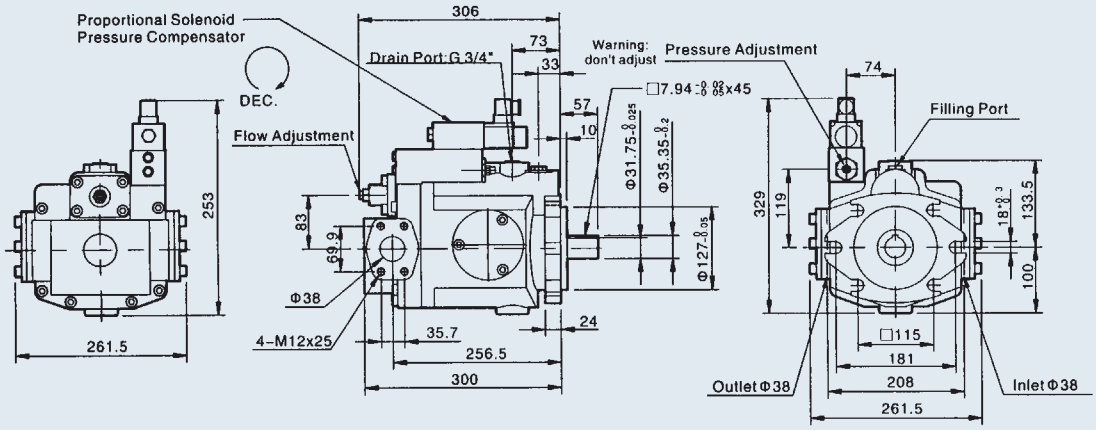

V50GM, V70GM Remote Interface (Not include valve)

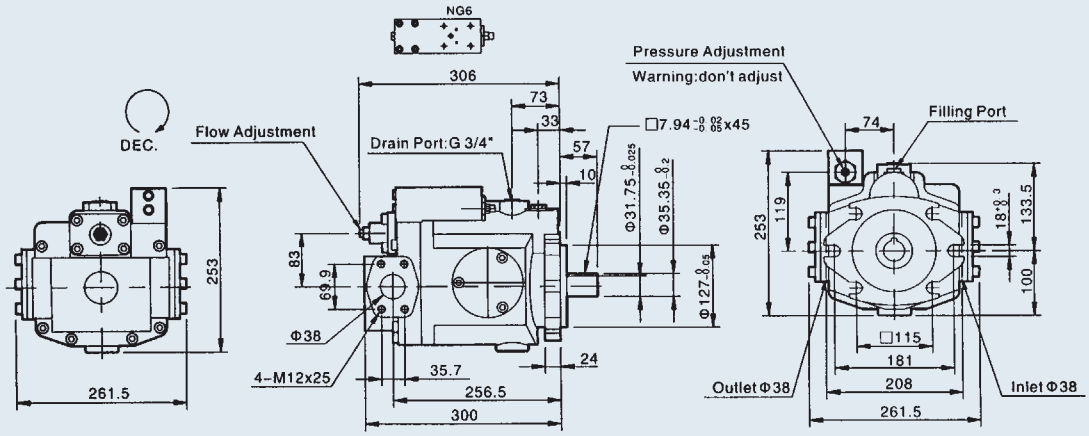

V50HL, V70HL Load-sensing Compensator

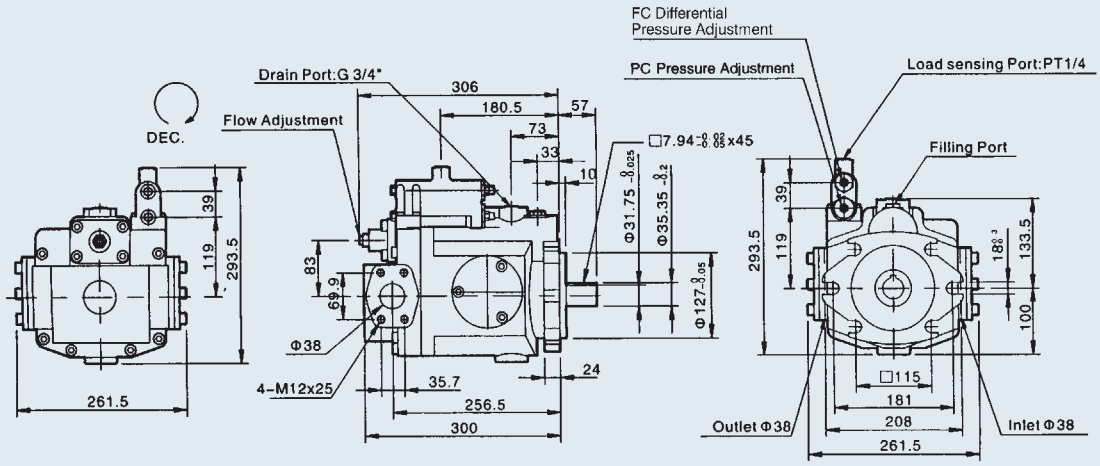

V SERIES AXIAL PISTON PUMP

Dimensions

V50HK, V70HK Proportional Electro-hydraulic Load Sensing Type

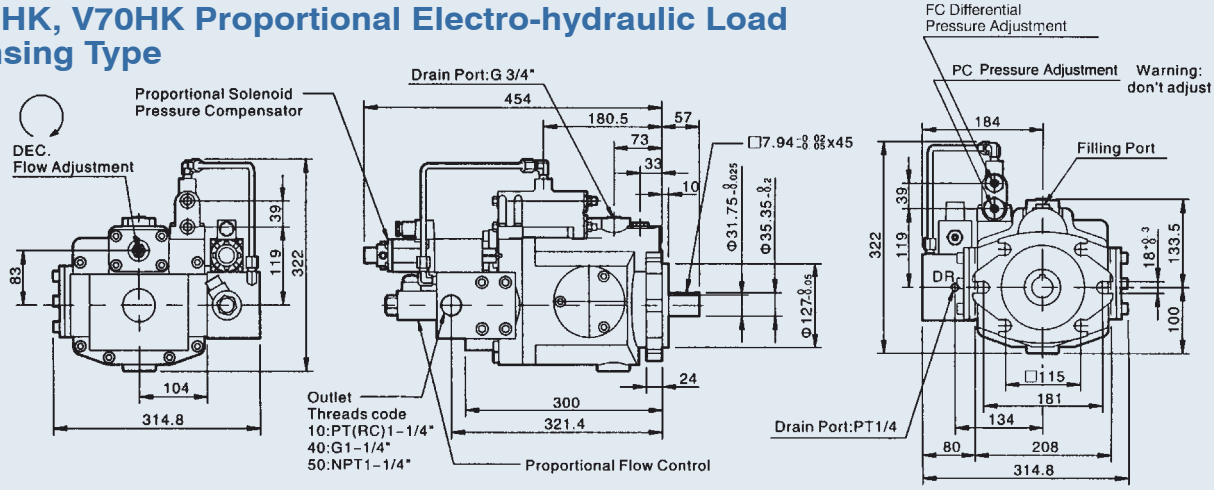

V50HQ, V70HQ Load-Sensing Proportional Flow Control

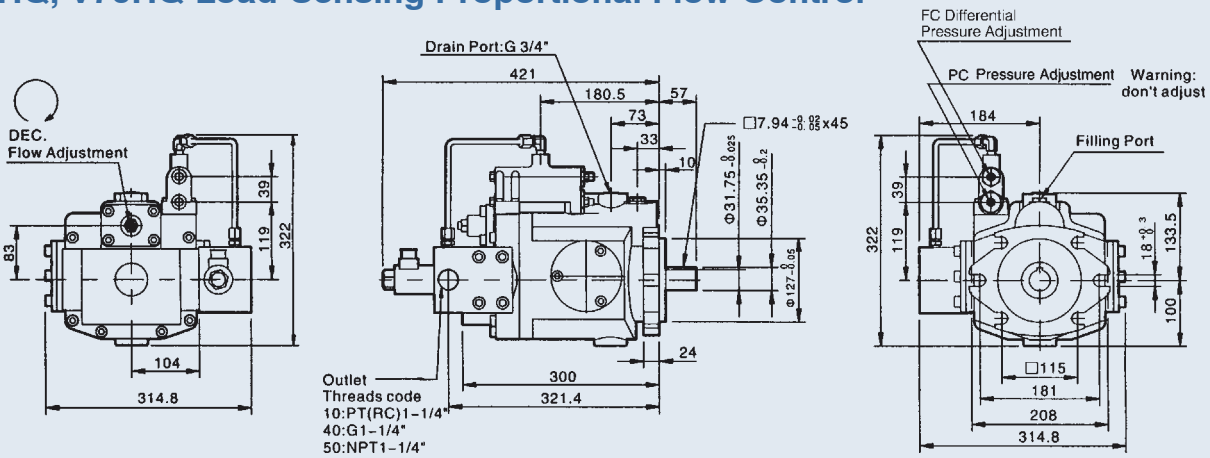

V50, V70 Splined Shaft Type

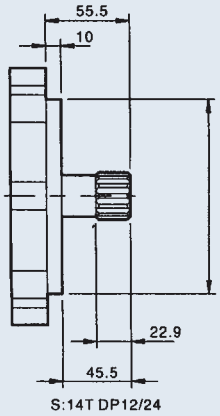

V50, V70 Hydraulic Flange

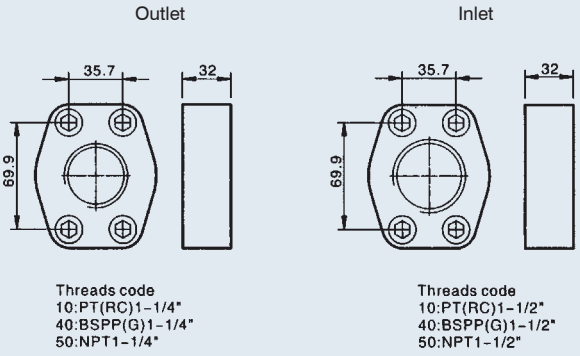

V SERIES AXIAL PISTON PUMP

Dimensions

V50, V70 Prepared for Thru Drive (SAE Aø82.55, SAE Bø101.6)

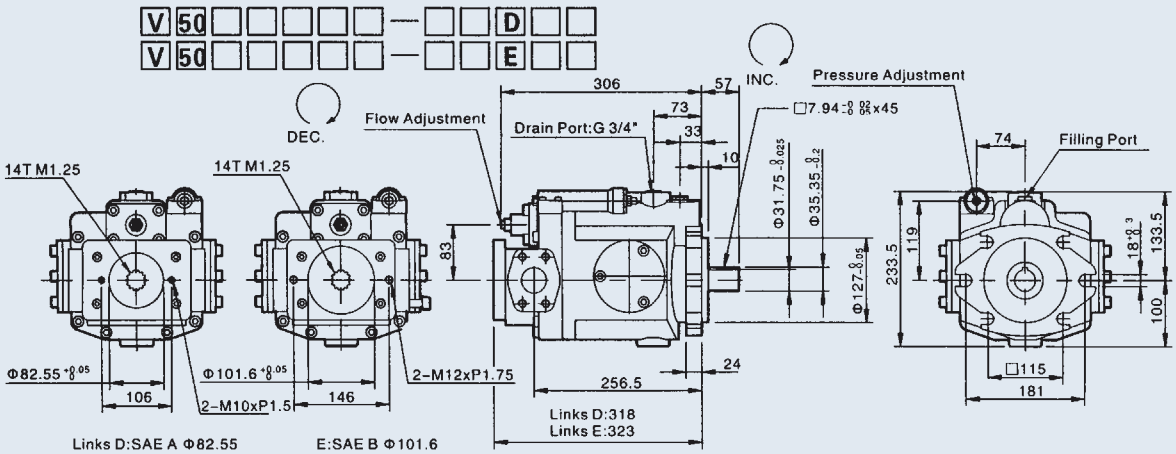

Type	A	B	C	CG	D	DG	E	EG	F	FG	G	GJ	GM	HL	HK	HQ
	O				O	O	O	O			O	O	O	O	O	O

Thru Drive Option

V50, V70 Axial Port

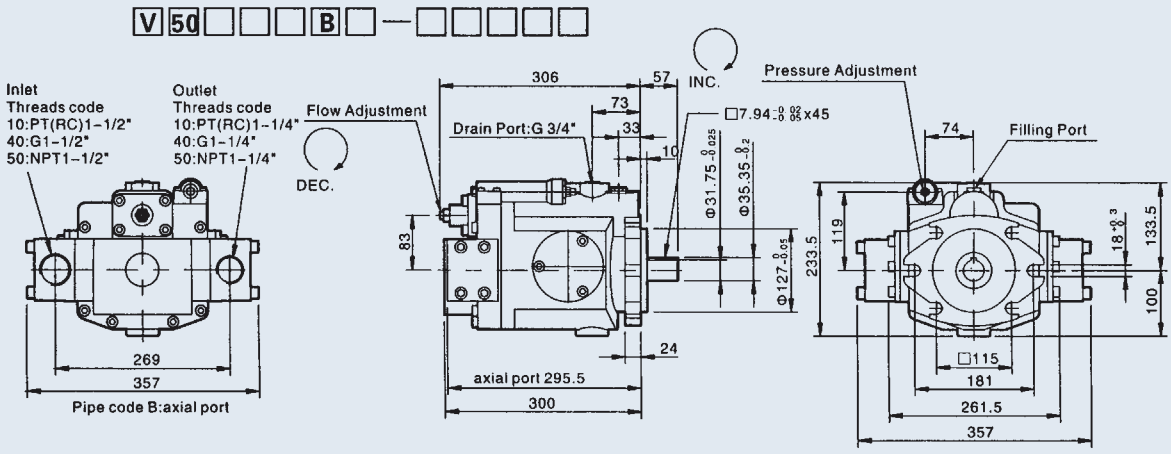

Type	A	B	C	D	F	G	GJ	GM	HL	HK	HQ
	O	O	O	O	O	O	O	O	O		

Axial Port Option

V SERIES AXIAL PISTON PUMP

B

Decomposition Chart

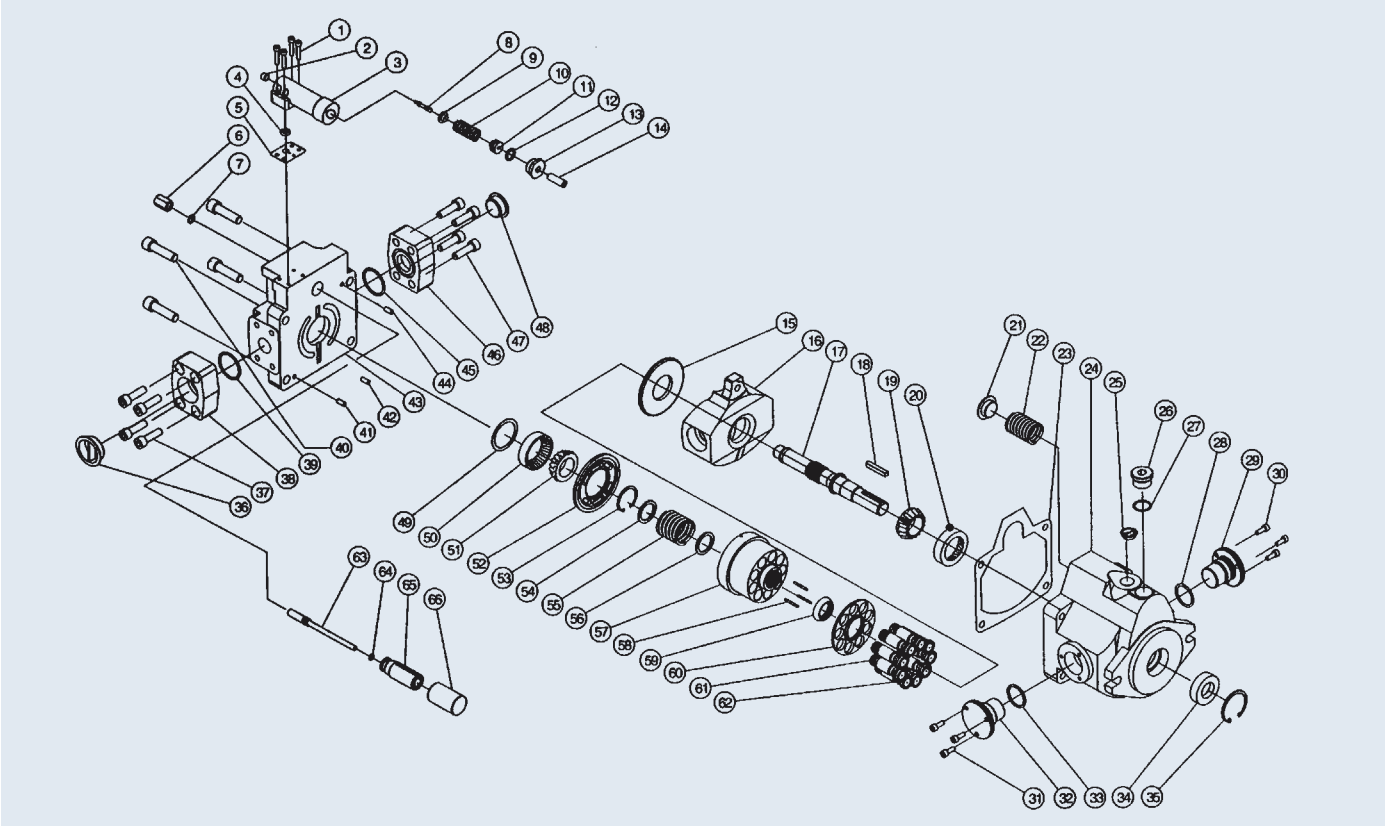

List of parts

No.	Description	No.	Description	No.	Description	No.	Description
1	Bolt	18	Shaft Key	35	M snap ring	52	Valve plate
2	Port plug	19	Bearing of shaft	36	Plug	53	Snap ring
3	Pressure compensator	20	Bearing of shaft	37	Bolt	54	Washer cylinder block
4	O-ring	21	Servo spring washer	38	Flange	55	Retainer spring
5	Gasket	22	Servo spring	39	O-ring	56	Washer cylinder block
6	Lock nut	23	End cover seal	40	Bolt	57	Cylinder block
7	O-ring	24	Pump body	41	Roller	58	Roller
8	Control compensator shaft	25	Drain plug	42	Roller	59	Cylinder block holder
9	Spring washer	26	Filling screw	43	End cover	60	Slipper retainer
10	Control spring	27	O-ring	44	Roller	61	Pistons
11	O-ring washer	28	O-ring	45	O-ring	62	Piston head
12	O-ring	29	Swash shaft	46	Flange	63	Flow screw
13	Lock nut	30	Bolt	47	Bolt	64	O-ring
14	Screw	31	Bolt	48	Plug	65	Sleeve piston
15	Slipper plate	32	Swash shaft	49	Washer cylinder block	66	Servo piston sleeve
16	Swash	33	O-ring	50	Bearing of pump cover		
17	Shaft	34	Shaft seal	51	Bearing of pump cover		

VR SERIES AXIAL PISTON PUMP

Dimensions

VR15A※※B-※Axial Port

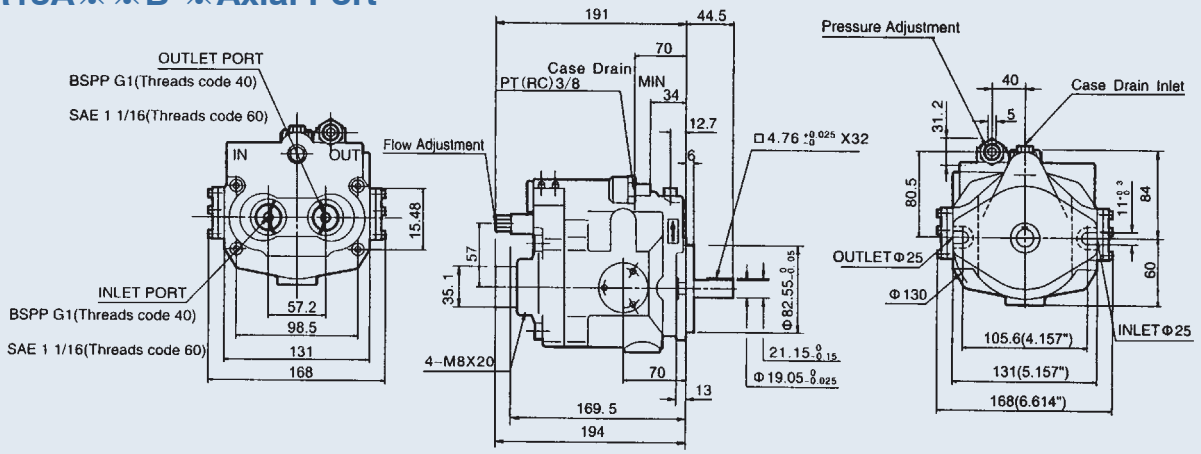

VR23A※※B-※Axial Port (Pipe type)

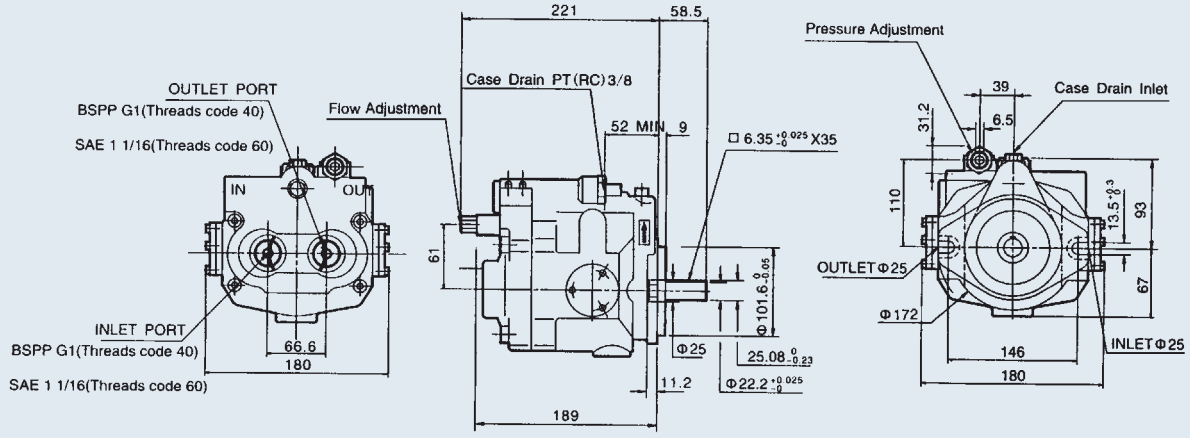

VR38A※※B-※Axial Port (Pipe type)

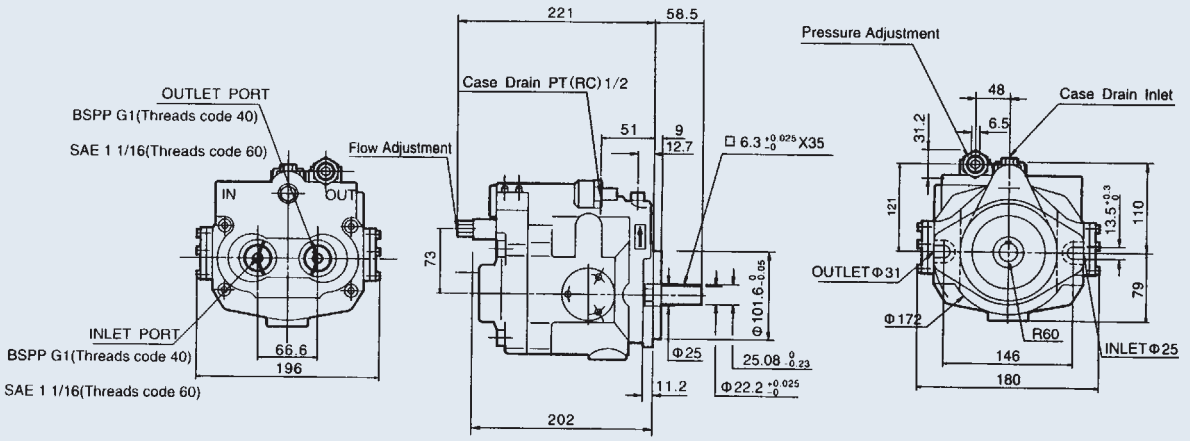

V SERIES TANDEM AXIAL PISTON PUMP

Tandem pump (Multi-option for tandem pump)

Pump 1 Pump 2	V15(V18) V15(V18)	V23(V25) V15(V18)	V23(V25) V23(V25)	V38(V42) V15(V18)	V38(V42) V23(V25)	V38(V42) V38(V42)	V50(V70) V15(V18)	V50(V70) V23(V25)	V50(V70) V38(V42)
A	G 3/8"	G 3/8"	G 3/8"	G 3/8"	G 3/8"	G 1/2"	G 3/8"	G 3/8"	G 1/2"
B	G 3/8"	G 3/8"	G 3/8"	G 1/2"	G 1/2"	G 1/2"	G 3/4"	G 3/4"	G 3/4"
C	57.45	57.45	61	57.45	61	73	57.45	61	73
D	35.1	35.1	52.4	35.1	52.4	58.7	35.1	52.4	58.7
E	35.1	35.1	26.2	35.1	26.2	30.2	35.1	26.2	30.2
F	35.1	52.4	52.4	58.7	58.7	58.7	69.9	69.9	69.9
G	35.1	26.2	26.2	30.2	30.2	30.2	35.7	35.7	35.7
H	M8×20	M8×20	M10×16	M8×20	M10×16	M10×16	M8×20	M10×16	M10×16
I	M8×20	M10×16	M10×16	M10×16	M10×16	M10×16	M12×25	M12×25	M12×25
J	147	147	170	147	170	179	147	170	179
K	147	170	170	179	179	179	256.5	256.5	256.5
L	332	369	402	378	401	410	464	493	502
M	382	419	455	428	454	465	515	546	555
N	48	48	51	48	51	51	48	51	51
O	48	51	51	51	51	51	73	73	73
P	6	9	9	9	9	9	10	10	10
Q	4.76×32	6.35×40	6.35×40	6.35×40	6.35×40	6.35×40	7.94×45	7.94×45	7.94×45
R	13	14	14	14.5	14.5	14.5	24	24	24
S	ø19.05	ø22.22	ø22.22	ø22.22	ø22.22	ø22.22	ø31.75	ø31.75	ø31.75
T	21.15	25.08	25.08	25.08	25.08	25.08	35.35	35.35	35.35
U	ø82.55	ø101.6	ø101.6	ø101.6	ø101.6	ø101.6	ø127	ø127	ø127
V	ø25	ø25	ø25	ø31	ø31	ø31	ø38	ø38	ø38
W	ø25	ø25	ø25	ø31	ø31	ø31	ø38	ø38	ø38
X	106	146	146	146	146	146	181	181	181
Y	131	146	146	160	160	160	208	208	208
Z	165	182	182	198.6	198.6	198.6	261.5	261.5	261.5
A1	44	39	39	39	39	39	74	74	74
A2	31.2	31.2	31.2	31.2	31.2	31.2	40	40	40
A3	5	5	5	5	5	5	8	8	8
A4	84	110	110	121	121	121	119	119	119
A5	11	13.5	13.5	13.5	13.5	13.5	18	18	18
A6	44.5	58.5	58.5	58.5	58.5	58.5	57	57	57
A7	160	193	193	210	210	210	233.5	233.5	233.5
A8	91.5	93	93	113.5	113.5	113.5	133.5	133.5	133.5
A9	60	68	68	72	72	72	100	100	100

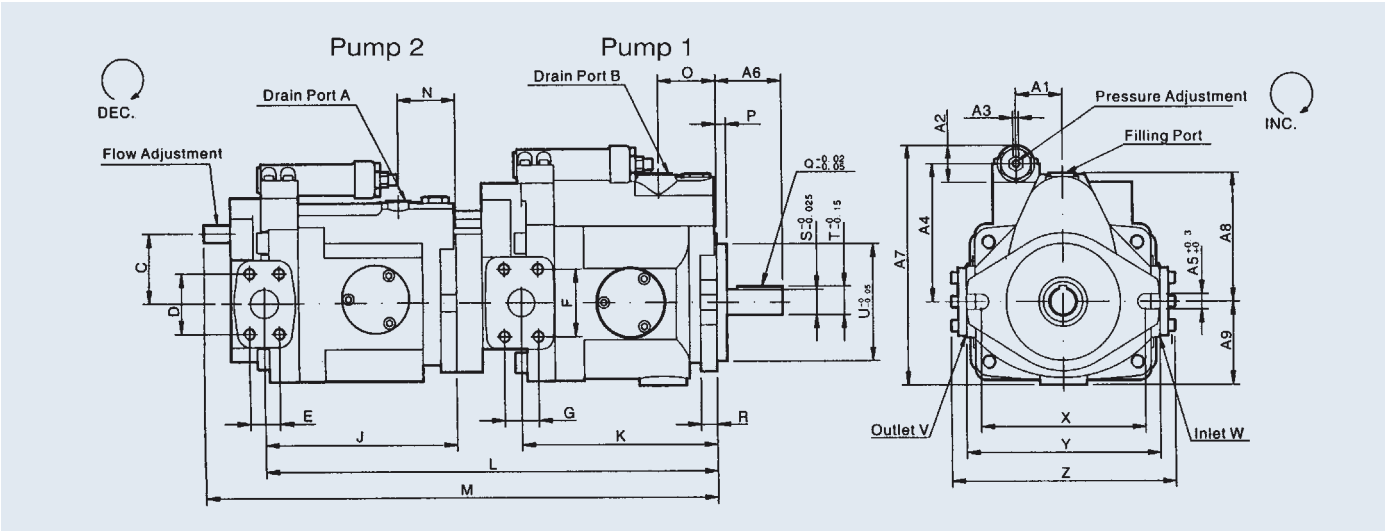

AR SERIES AXIAL PISTON PUMP

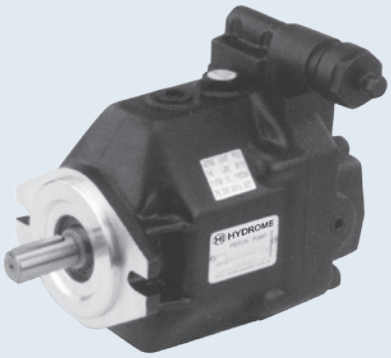

AR Control Type (see page. 15,16,17)

01: Pressure Compensator
G: Remote Pressure Compensator
GJ: Layer Porportional Pressure Compensator
GR: Electrical Unloading
GB: Dual Pressure Control
GC: Dual Pressure+Electrical Unloading
GM: Remote Pressure Compensator allows a pilot valve
HL: Load-sensing Compensator

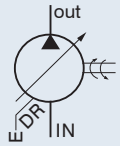

Ordering Codes

※Standard

Model	F	R	01	C	S	K	10	Y
	Mounting	Direction of Rotation	Control Type	Pres. Adj. Range bar (MPa)	Port Position	Shaft Extension	Threads Code	Design
AR16 (15.8cc/rev) AR22 (22.2cc/rev)	F: Flange Mtg.	Viewed from Shaft End * R: Clockwise (Standard) L: Counter Clockwise	01: Pressure Compensator Type HL: Load Sensing Compensator G: Remote Pressure Compensator	B:12~70 (1.2~7) C:12~210 (1.2~21)	None: Axial Port S: Side Port	*K: Keyed G: 16/32 DP-13T T: 16/32 DP-9T	*10: PT(RC) theard 40: BSPP(G) theard 50: NPT theard	X *Y

Y-Type

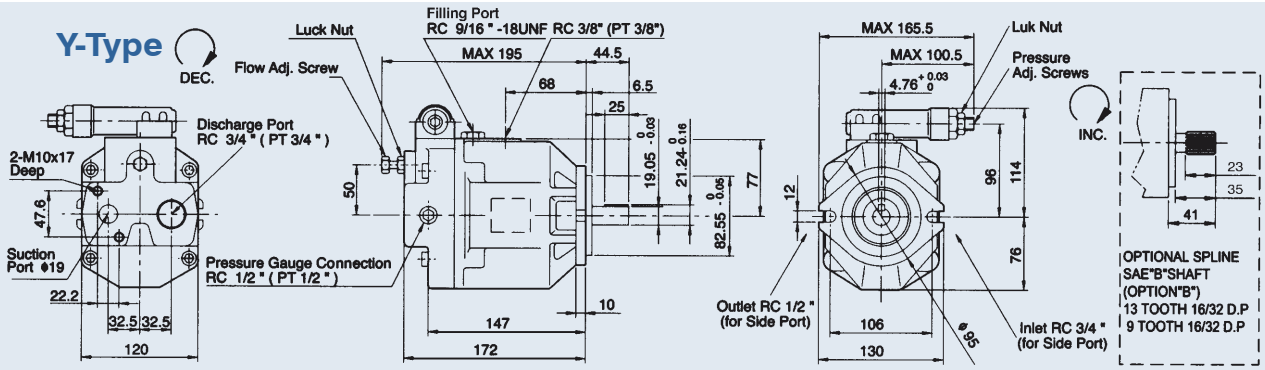

AR-16 Input Speed:1800 rpm/min

Fluid:Standard Hydraulic Oil ISO VG32 @50℃

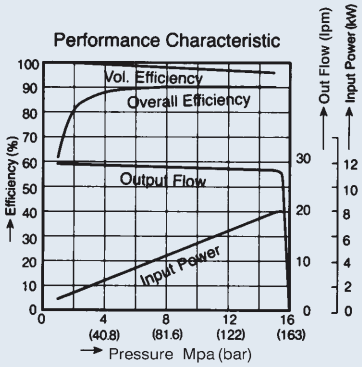

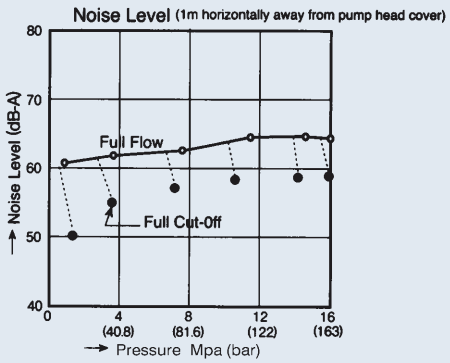

AR-22 Input Speed:1800 rpm/min

Fluid:Standard Hydraulic Oil ISO VG32 @50℃

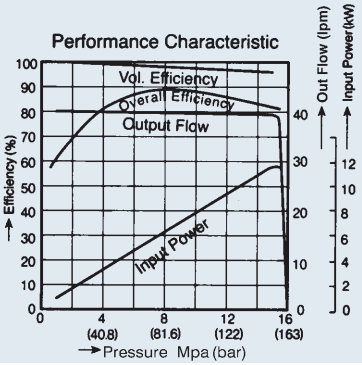

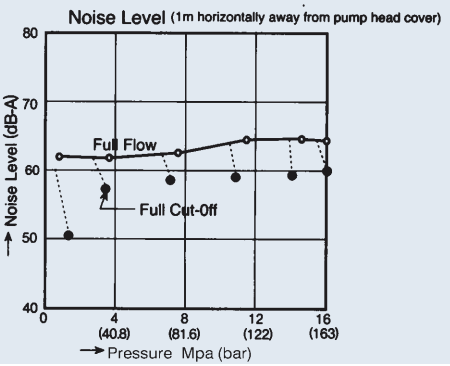

AR SERIES AXIAL PISTON PUMP

B

Decomposition Chart

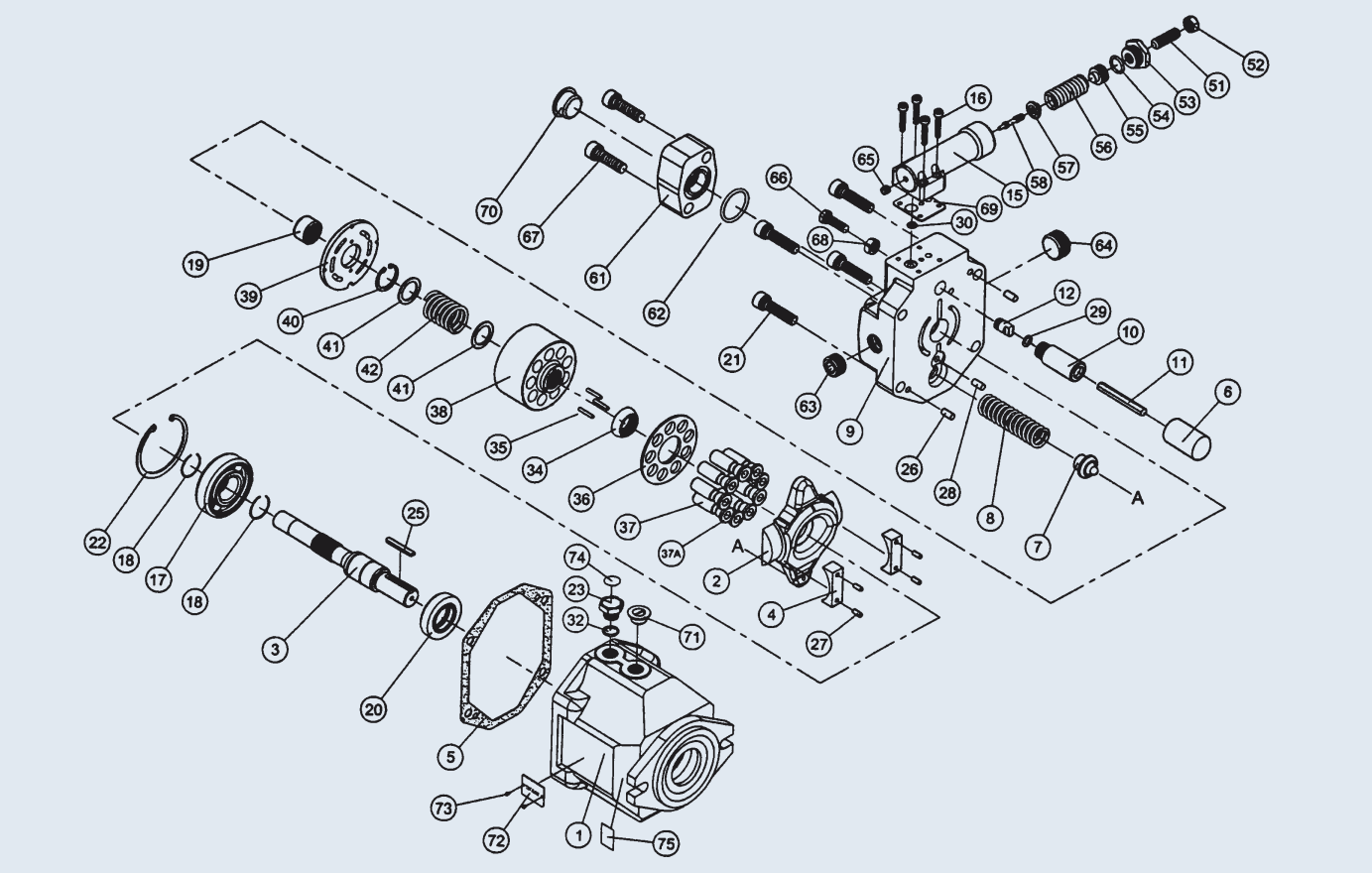

List of parts

No.	Description	No.	Description	No.	Description	No.	Description
1	Pump body	18	C snap ring 1-1/2	36	Slipper retainer	58	Control compensator shaft
2	Swash	19	1715 bearing rear	37	Piston	61	Flange 506A (6”)
3	Swash shaft	20	Shaft seal	37A	Head of piston	62	O-ring G30
4	Swash plate	21	Screw M10x40L	38	Cylinder block	63	Pipe plug 1/2
5	Body seal	22	R62 snap ring	39	Valve plate	64	Pipe plug 3/4
6	Servo piston sleeve	23	Plug, feeder	40	Snap ring for bore R28	65	NPT 1/16
7	Servo spring washer	25	Key	41	Washer cylinder block	66	Screw M8x35
8	Swash spring	26	Locator pin, body	42	Retainer spring	67	Screw M10x35
9	Pump body / end cover	27	Locator pin, cradle	51	Screw M10x30	68	Lock nut M8
10	Sleeve piston	28	Locator pin, ø6x12.8	52	Lock nut M10	69	Body seal
11	Flow bar	29	O-ring P8 70˚	53	Control lock nut	70	Plastic plug 3/4
12	Seal	30	O-ring P7	54	O-ring P14 70˚	71	Plastic plug 3/8
15	Valve	32	O-ring S11	55	Control washer	72-73	Name Plate
16	Screw M5x25L	34	Cylinder block holder	56	Control spring	74-75	Description label
17	6305 bearing front	35	Roller	57	Spring washer		

PV SERIES AXIAL PISTON PUMP

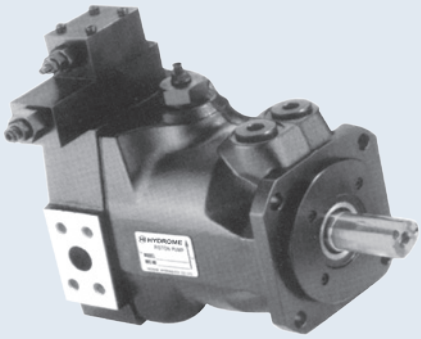

FEATURES

1. New type of swash plate and large servo pistons with strong bias spring achieve fast response, reduce the noise due to active decompression of system at down stroke.
2. Nine piston and new precompression technology (precompression filter volume) result in unbeaten low outlet flow pulsation.
3. Rigid and FEM-optimized body design for lowest noise level.
4. Thru drive for 100% nominal torque.
5. Pump combinations (tandem pumps) of same size and model and mounting interface for basically all metric or SAE mounting interfaces.

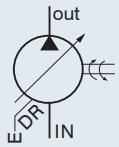

Continuous: 350bar
Intermittent: 420bar

B

Quick Reference Data Chart

Model	Displacement		Pump Delivery (7 bar) 100 PSI					
			1200 RPM		1500 RPM		1800 RPM	
	cc/rev	In³/rev	LPM	U.S. GPM	LPM	U.S. GPM	LPM	U.S. GPM
PV016	16	0.98	19.2	5.1	24	6.3	28.8	7.6
PV020	20	1.2	24	6.3	30	7.9	36	9.5
PV023	23	1.4	27.6	7.3	34.5	9.1	41.4	10.9
PV032	32	19	38.4	10.1	48	12.7	57.6	15.2
PV040	40	2.4	48	12.7	60	15.9	72	19
PV046	46	2.8	55.2	14.6	69	18.2	82.8	21.9
PV063	63	3.8	75.6	20	94.5	25	113.4	30
PV071	71	4.3	85.8	22.7	107	28.3	128.7	34
PV080	80	4.8	96	25.4	120	31.7	144	38
PV092	92	5.6	110.4	29.2	138	36.5	165.6	43.8
PV140	140	8.5	168	44.4	210	55.5	252.1	66.6
PV180	180	11	216	57.1	270	71.3	324	85.6
PV270	270	16.5	324	85.6	405	107	486	128.4

Model	APPROX. Noise Levels Db(A) Full Flow and 1500 RPM			Input Horse Power, Max. Displacement & 345 bar (5000PSI)		Operating Speed		Weight (kg)	
	70 bar (1 KPSI)	207 bar (3 KPSI)	343 bar (5 KPSI)	1500 rpm	1800 rpm	Max.	Min.		
				KW(hp)	KW(hp)	RPM	RPM	kg	lb
PV016	56	60	68	15.5 (20.8)	18.5 (24.8)	2750	300	19	41.8
PV020				19.5 (26.1)	23.4 (31.4)				
PV023				22.5 (30.2)	25.1 (33.6)				
PV032	59	62	69	31 (41.6)	35.1 (47.1)	2400		30	66
PV040				39 (52.3)	46.5 (62.3)				
PV046				45 (60.3)	50.2 (67.3)				
PV063	66	70	74	61.5 (82.4)	70.1 (94)	2100		60	132
PV071				70 (93.8)	80 (107.2)	2100			
PV080				78 (104.6)	89.2 (119.6)	2000			
PV092				89.5 (120)	136.8 (183.4)	1900			
PV140	70	74	76	136 (182.3)	149.4 (200.3)	2200		90	198
PV180	71	75	77	175 (235)	210 (282)	2200		90	198
PV270	77	79	81	263 (353)	298 (400)	1800		172	378.4

1. **Installation outlet port top, the pipe have to less than 2 bar.**
2. **The use of max. pressure override 6 min, hydraulic oil clean that see General Installation Information.**
3. **Hydrome offer tandem pumps, and other pumps connection, the connection type use metric version and SAE version dimensions.**

PV SERIES AXIAL PISTON PUMP

How to order

PV - 063 - GT - R - M - 1 - A - ※ - ※ - ※

1 2 3 4 5 6 7 8 9 10

1 Series Axial piston pump variable displacement high pressure version

2 Size and Displacement

Code	Displacement cc/rev (In³/rev)
016	16 (0.98)
020	20 (1.2)
023	23 (1.4)
032	32 (1.9)
040	40 (2.4)

Code	Displacement cc/rev (In³/rev)
046	46 (2.8)
063	63 (3.8)
071	71 (4.3)
080	80 (4.8)
092	92 (5.6)

Code	Displacement cc/rev (In³/rev)
140	140 (8.5)
180	180 (10.9)
270	270 (16.5)

3 Control Types

	Code	Compensator
※	Standard Type Pressure Compensator	
	A2	10~140 bar
	A3	40~210 bar
	A4	70~350 bar
	Remote Type	
※	GT	Remote pressure compensator
※	GM	Remote pressure compensator allows a pilot valve
	GA	Remote pressure compensator allows a pilot valve (valve included)
	GJ	Layer proportional pressure compensator (valve included)
	Electrical Unloading Type	
	GR	Electrical unloading
	GB	Dual pressure control
	GC	Dual pressure+electrical unloading
	Load-sensing Type	
※	HL	Load-sensing type
	HM	Load-sensing type
	HJ	2-valve load-sensing type (valve included)
	HA	2-valve load-sensing type
	HK	Proportional electro-hydraulic load sensing type
	HQ	Load-sensing & Proportional flow control
	Proportionable displacement Type	
	FV	Proportionable displacement control
	FR	Proportionable displacement control with pressure
	FG	Proportionable displacement control with pressure control
	Horse Power Type	
	PA□	Horse power compensator
※	PM□	Horse power compensator, pilot flow internal pressure pilot valve (valve included)
	PG□	Horse power compensator, pilot flow internal
	PL□	Horse power compensator, load-sensing compensator
	PH□	Horse power compensator, pilot flow external for load-sensing

Code	Horse power	PV016~ PV023	PV032~ PV046	PV063~ PV092	PV140	PV180	PV270
A	3 KW	●					
B	4 KW	●					
C	5.5 KW	●	●				
D	7.5 KW	●	●				
E	11 KW	●	●	●			
F	15 KW		●	●			
G	18.5 KW		●	●	●		
H	22 KW		●	●	●	●	
I	30 KW			●	●	●	
J	37 KW			●	●	●	●
K	45 KW			●	●	●	●
L	55 KW				●	●	●
M	75 KW					●	●
N	90 KW					●	●
O	110 KW						●
P	132 KW						●

4 Rotation (Viewed from shaft end)

	Code	Rotation
※	R	clockwise
	L	counterclockwise

B

PV SERIES AXIAL PISTON PUMP

How to order

PV - 063 - GT - R - M - 1 - A - ※ - ※ - ※

1 2 3 4 5 6 7 8 9 10

5 Mounting

※

Code	Mounting	
M (standard)	Metric	ISO 3019/2 Cylindric, key
K		ISO 3019/2 Splined, DIN5480

Code	Mounting	
N	Inch	ISO 3019/1 Cylindric, key
D		ISO 3019/1 Splined, SAE

※

Code		Model	Shaft		Flange		Mounting
			A	B	C	D	E
M	Metric	PV016~PV023	ø25	8×7×40	ø100	9	ø125
		PV032~PV046	ø32	10×8×56	ø125	9	ø160
		PV063~PV092	ø40	12×8×80	ø160	9	ø200
		PV140~PV180	ø50	12×8×80	ø160	9	ø200
		PV270	ø65	12×8×80	ø200	9	ø250
K	Metric	PV016~PV023	W25×1.5×15×8f DIN5480		ø100	9	ø125
		PV032~PV046	W32×1.5×20×8f DIN5480		ø125	9	ø160
		PV063~PV092	W40×1.5×25×8f DIN5480		ø160	9	ø200
		PV140~PV180	W50×2×24×9g DIN5480		ø160	9	ø200
		PV270	W60×2×28×9g DIN5480		ø200	9	ø250
N	Inch	PV016~PV023	ø1"	0.25"×0.25"×1.6"	ø4"	3/8"	ø5"
		PV032~PV046	ø1-1/4"	5/16"×5/16"×2.2"	ø5"	1/2"	ø6.37"
		PV063~PV092	ø1-3/4"	7/16"×7/16"×3.15"	ø6"	1/2"	ø9"
		PV140~PV180	ø2"	1/2"×1/2"×2.95"	ø6"	1/2"	ø9"
		PV270	ø2"	1/2"×1/2"×2.95"	ø6.5"	5/8"	ø12.5"
D	Inch	PV016~PV023	Splined 15T 16/32DP ANSI B92.1		ø4"	3/8"	ø5"
		PV032~PV046	Splined 14T 12/24DP ANSI B92.1		ø5"	1/2"	ø6.37"
		PV063~PV092	Splined 13T 8/16DP ANSI B92.1		ø6"	1/2"	ø9"
		PV140~PV180	Splined 15T 8/16DP ANSI B92.1		ø6"	1/2"	ø9"
		PV270	Splined 15T 8/16DP ANSI B92.1		ø6.5"	5/8"	ø12.5"

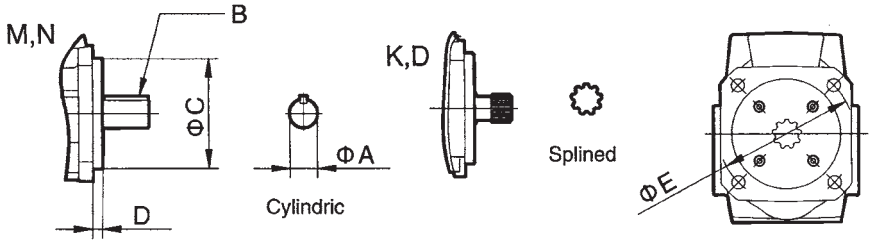

6 Threads

※

Code	Threads
1 (standard)	BSPP (G)
2	PT (RC)
3	UNF
4	NPT
7	ISO 6149

PV SERIES AXIAL PISTON PUMP

How to order

PV - 063 - GT - R - M - 1 - A - ※-※-※

1 2 3 4 5 6 7 8 9 10

7 Thru drive & 2nd pump

	Code		
	Code	Thru drive & 2nd pump	
※	A (standard)	Single pump	
※	B	Prepared for thru drive	
	With adaptor for 2nd pump		
	C	Inch	SAE AA, ø2" (ø50.8mm)
	D		SAE A, ø3-1/4" (ø82.55mm)
	E		SAE B, ø4" (ø101.6mm)
	F		SAE C, ø5" (ø127mm)
	G		SAE D, ø6" (ø152.4mm)
	H		SAE E, ø6.5" (ø165.1mm)
	I	Metric	Metric, ø63
	J		Metric, ø80
	K		Metric, ø100
	L		Metric, ø125
	M		Metric, ø160
	N		Metric, ø200
	Other pump are acceptable order		

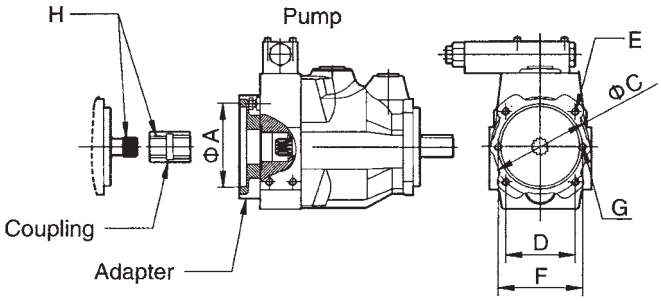

Code		Model	øA	øC	D	E	F	G	H
C	Inch	SAE AA, ø2" (ø50.8mm)	ø2" (ø50.8)				3.25" (82.55mm)	5/16"-18	9T 20/40 DP
D		SAE A, ø3-1/4" (ø82.55mm)	ø3-1/4" (ø82.55)				4.188" (106.3mm)	3/8"-16	9T 16/32 DP
E		SAE B, ø4" (ø101.6mm)	ø4" (ø101.6)		3.536" (89.8mm)	1/2"-13	5.75" (146.05mm)	1/2"-13	13T 16/32 DP, 15T 16/32 DP
F		SAE C, ø5" (ø127mm)	ø5" (ø127)		4.508" (114.5mm)	1/2"-13	7.125" (180.98mm)	5/8"-11	14T 12/24 DP, 15T 16/32 DP
G		SAE D, ø6" (ø152.4mm)	ø6" (ø152.4)		6.364" (161.6mm)	5/8"-11	9" (228.6mm)	5/8"-11	13T 8/16 DP, 15T 8/16 DP
H		SAE E, ø6.5" (ø165.1mm)	ø6.5" (ø165.1)		8.839" (224.5mm)	3/4"-10			15T 8/16 DP
I	Metric	Metric, ø63	ø63	ø85		M8	100	M8	
J		Metric, ø80	ø180	ø103		M8	109	M10	
K		Metric, ø100	ø100	ø125		M10	150	M12	W25×1.5×15×8f
L		Metric, ø125	ø125	ø160		M12	180	M16	W32×1.5×20×8f
M		Metric, ø160	ø160	ø200		M16	224	M20	W40×1.5×25×8f , W50×2×24×9g
N		Metric, ø200	ø200	ø250		M20			W50×2×24×9g

Coupling Code	pump	H	
A-D1	PV016~ PV023	D1	9T 20/40 DP
A-D2		D2	9T 16/32 DP
A-D3		D3	13T 16/32 DP
A-D4		D4	15T 16/32 DP
A-W1		W1	W25×1.5×15×8f
B-D2	PV032~ PV046	D2	9T 16/32 DP
B-D3		D3	13T 16/32 DP
B-D4		D4	15T 16/32 DP
B-D5		D5	14T 12/24 DP
B-W1		W1	W25×1.5×15×8f
B-W2		W2	W32×1.5×20×8f
C-D2	PV063~ PV092	D2	9T 16/32 DP
C-D3		D3	13T 16/32 DP
C-D4		D4	15T 16/32 DP

Coupling Code	pump	H	
C-D5	PV063~ PV092	D5	14T 12/24 DP
C-D6		D6	13T 8/16 DP
C-D7		D7	15T 8/16 DP
C-W1		W1	W25×1.5×15×8f
C-W2		W2	W32×1.5×20×8f
C-W3		W3	W40×1.5×25×8f
C-W4		W4	W50×2×24×9g
D-D2	PV140~ PV180	D2	9T 16/32 DP
D-D3		D3	13T 16/32 DP
D-D4		D4	15T 16/32 DP
D-D5		D5	14T 12/24 DP
D-D6		D6	13T 8/16 DP
D-D7		D7	15T 8/16 DP
D-W1		W1	W25×1.5×15×8f

Coupling Code	pump	H	
D-W2	PV140~ PV180	W2	W32×1.5×20×8f
D-W3		W3	W40×1.5×25×8f
D-W4		W4	W50×2×24×9g
E-D2	PV270	D2	9T 16/32 DP
E-D3		D3	13T 16/32 DP
E-D4		D4	15T 16/32 DP
E-D5		D5	14T 12/24 DP
E-D6		D6	13T 8/16 DP
E-D7		D7	15T 8/16 DP
E-W1		W1	W25×1.5×15×8f
E-W2		W2	W32×1.5×20×8f
E-W3		W3	W40×1.5×25×8f
E-W4		W4	W50×2×24×9g
E-W5		W5	W60×2×28×9g

8 Voltage

Code	Voltage
0	None
A	AC100V (50-60Hz)
B	AC110V (60Hz)

Code	Voltage
C	AC200V (50-60Hz)
D	AC220V (60Hz)
E	DC12V

Code	Voltage
F	DC24V

9 Seals

	Code	Seals
※	N	NBR
	V	FPM

Code	Seals
E	Ethylen-propylen

10 Design No. Not require for order

PV SERIES AXIAL PISTON PUMP

B

Compensator

Standard Type

A: Standard pressure compensator remote type
GT: Remote pressure compensator
GM: Remote pressure compensator allows a pilot valve
GA: Remote pressure compensator allows a pilot valve (valve included)
GJ: Layer proportional pressure compensator (valve included)

Load-sensing Type

HL: Load-sensing compensator
HM: Load-sensing compensator
HJ: 2-vavle load-sensing compensator
HA: 2-vavle load-sensing compensator (valve included)
HK: Proportional electro-hydraulic load sensing type
HQ: Load-sensing & Proportional flow control

Electrical Unloading Type

GR: Electrical unloading
GB: 2 pressure electrical selection
GC: 2 pressure + electrical unloading

Horse Power Type

PA: Horse power compensator
PM: Horse power compensator, pilot flow internal pressure pilot valve included
PG: Horse power compensator, pilot flow internal
PL: Horse power compensator, Load-sensing compensator
PH: Horse power compensator, pilot flow external for load-sensing

A: Standard Pressure compensator

The standard pressure compensator adjusts the pump displacement according to the actual need of the system in order to keep the pressure constant. As long as the system pressure at outlet port P is lower than the set pressure (set as spring preload of the compensator spring) the working port A of the compensator valve is connected to the case drain and the piston area is unloaded. Bias spring and system pressure on the annulus area keep the pump at full displacement.

When the system pressure reaches the set pressure the compensator valve spool connects port P1 to A and builds up a pressure at the servo piston resulting in a down stroking of the pump. The displacement of the pump is controlled in order to match the flow requirement of the system.

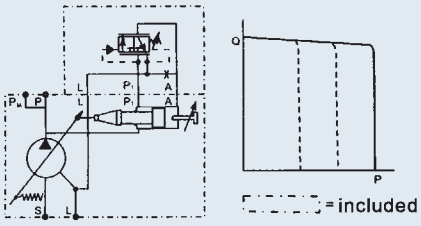

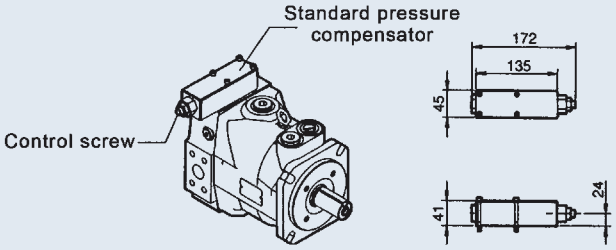

GT: Remote Pressure compensator

While at the standard pressure compensator the pressure is set directly at the compensator spring, the setting of the remote pressure compensator can be achieved by any suitable pilot pressure valve connected to pilot port PP. The pilot flow supply is internal through the valve spool.

The pilot flow is 1-1.5 lpm. The pilot valve can be installed remote from the pump in some distance. That allows pressure setting e.g. from the control panel of the machine. The remote pressure compensator and is able to solve instability problems that may occur with a standard pressure compensator in critical applications. The pressure pilot valve can also be electronically controlled (proportional pressure valve) or combined with a directional control valve for low pressure standby operation.

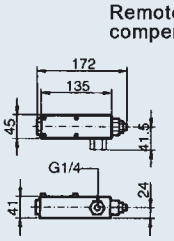

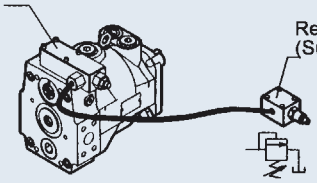

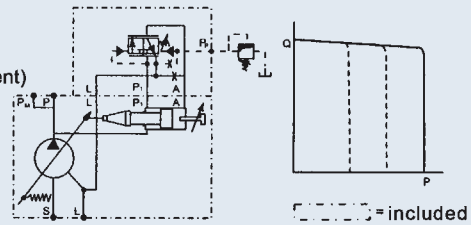

Compensator

Remote Pressure compensator allows pilot valve

Version GM of remote pressure compensator provides on its top side an interface NG6, DIN24340 (CETOP 03 at RP35H, NFPA D03). This interface allows a direct mounting of a pilot valve. Beside manual or electro hydraulic operated valves it is also possible to mount complete multiple pressure circuits directly on the compensator body. HYDROME offers a variety of these compensator accessories ready to install. All remote pressure compensator have a factory setting of 15 bar differential pressure. With this setting, the controlled pressure at the pump outlet is higher than the pressure controlled by the pilot valve.

GM: Remote Pressure compensator allows a pilot valve

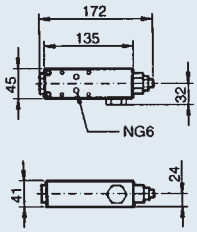

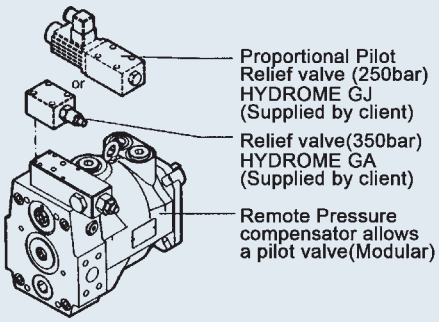

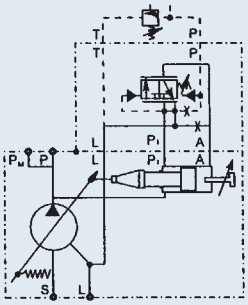

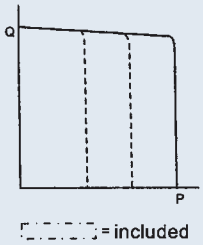

GA: Remote Pressure compensator allows a pilot valve (valve included)

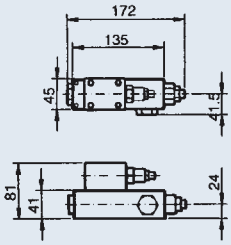

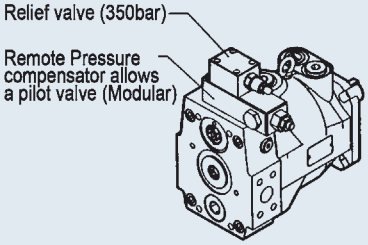

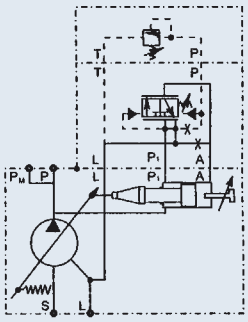

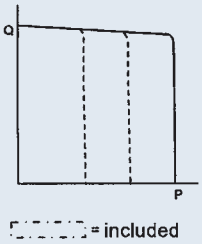

GJ: Layer Proportional pressure compensator (valve included)

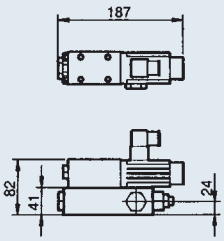

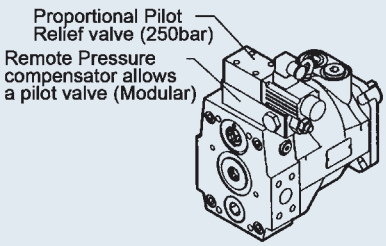

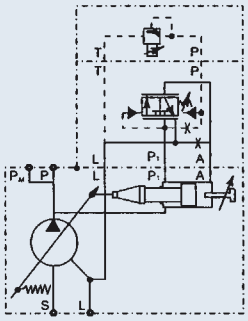

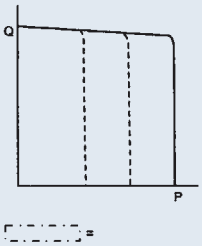

included

PV SERIES AXIAL PISTON PUMP

Compensator

Electrical Unloading Type

PV pump with fast response remote pressure control, relief valve with 2 pressure stages, electrical pressure selection, nitrile seals, spindle adjustment, 24 VDC solenoid, plug to DIN46350 accessories fitted.
Usable for horsepower control and proportional volume control, too.

GR: Electrical unloading type

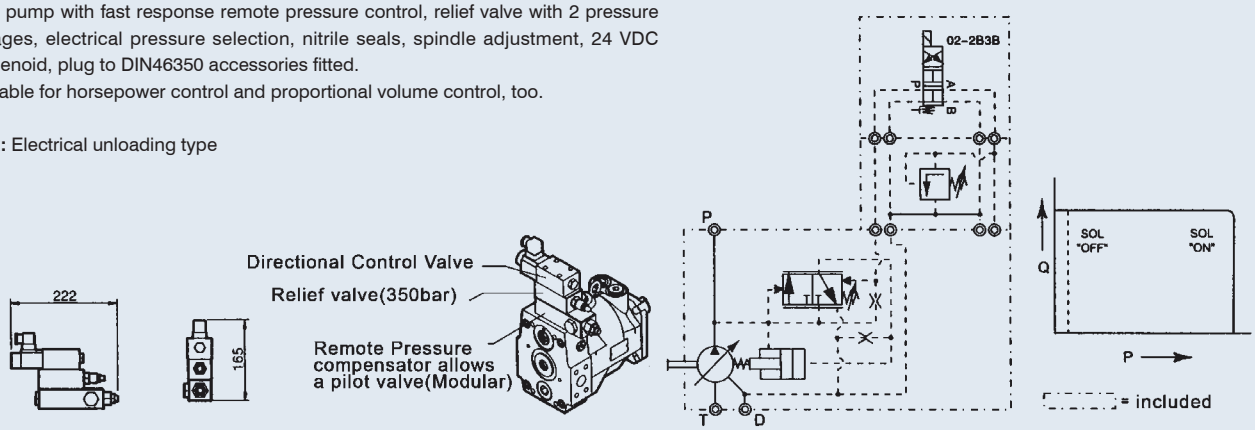

GB: Dual pressure control

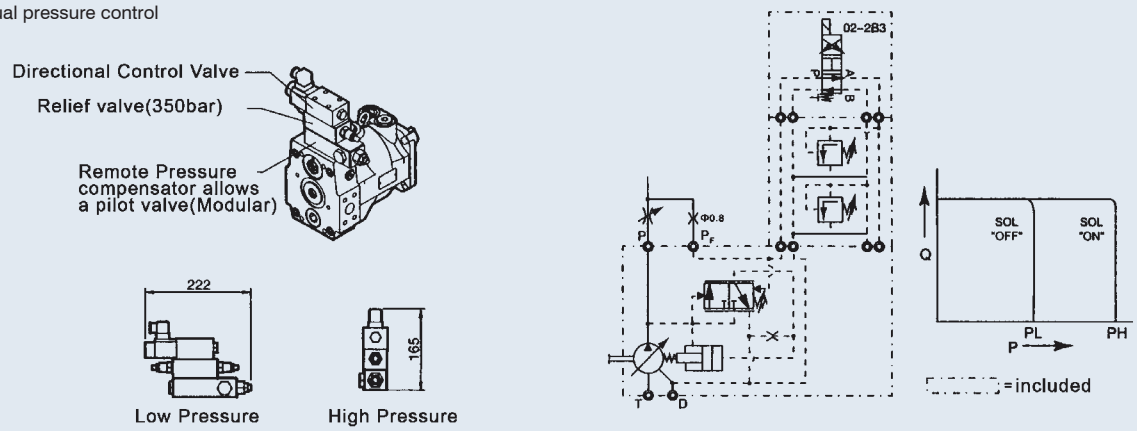

GC: Dual pressure + electrical unloading

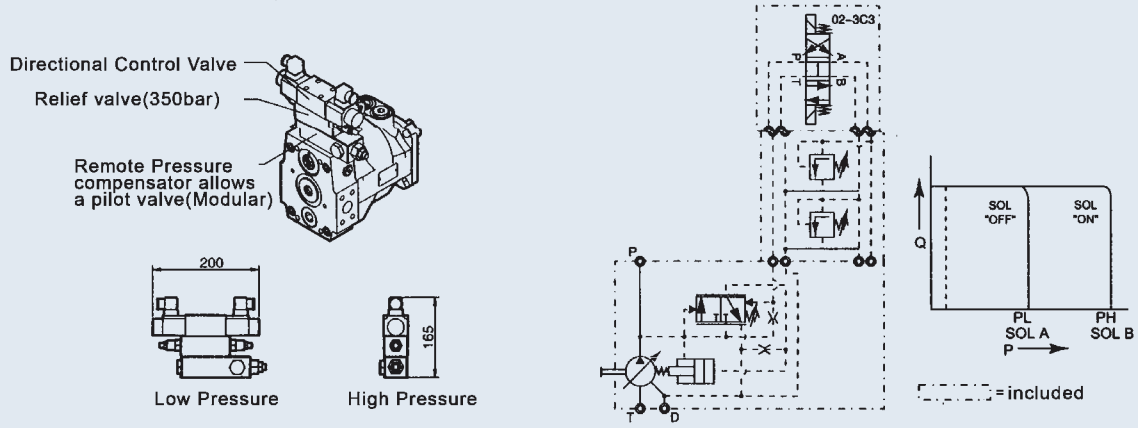

Compensator

Load-sensing Type

HL: Load-sensing compensator

The load-sensing compensator has an external pilot pressure supply. Factory setting for the differential pressure is 10 bar. The input signal to the compensator is the differential pressure at a main stream resistor. A load-sensing compensator represents mainly a flow control for the pump output flow, because the compensator keeps the pressure drop at the main stream resistor constant. A variable input speed or a varying load (pressure) has consequently no influence on the output flow of the pump and speed of the actuator. By adding a pilot orifice (ø0.8mm) and compensation can be added to the flow control function. See the circuit diagram below, left.

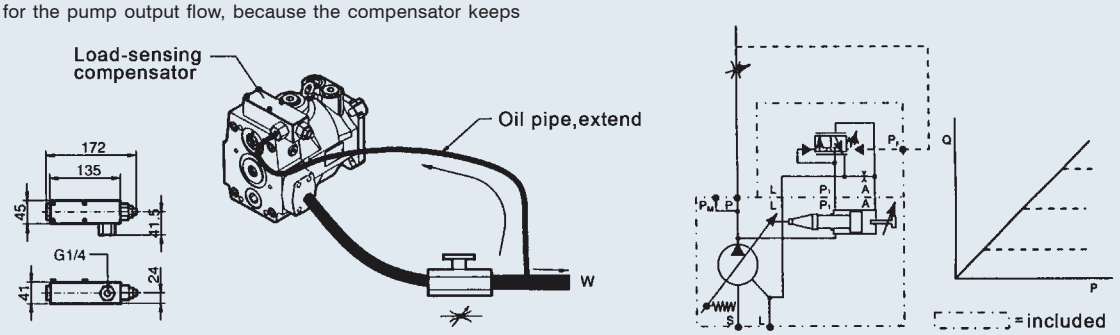

HM: Load-sensing compensator

Shown above is load sensing compensator code HM with an NG6 interface on top of the control valve. That allows direct mounting of a pilot valve for pressure compensation. This version includes the pilot orifice. Due to the interaction of flow and pressure compensation this package has not the "ideal" control characteristic. The deviation is caused by the pilot valves characteristic.

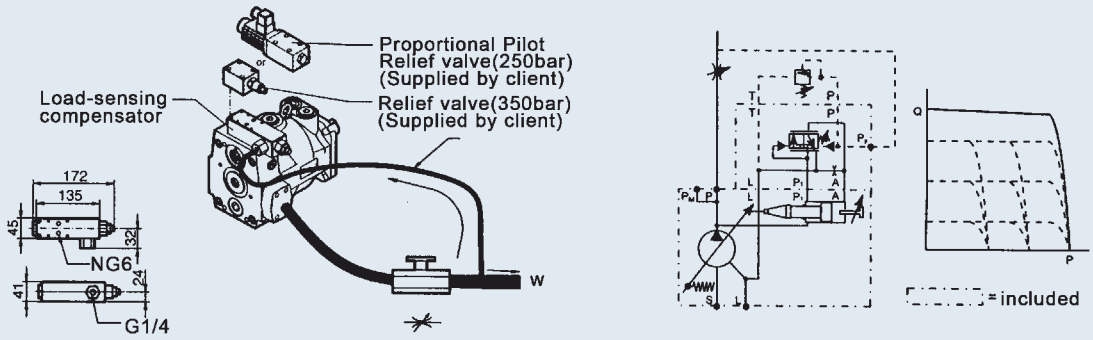

HJ: 2-valve load-sensing compensator

If a more accurate pressure compensation is required, the 2-valve load-sensing compensator code HJ can be used. The circuit diagram of this version is shown left. Here the interaction of the two control functions is avoided by using two separate control valves for flow and pressure compensation. The 2-valve compensator is equipped with an interface NG6 on the compensators top side.

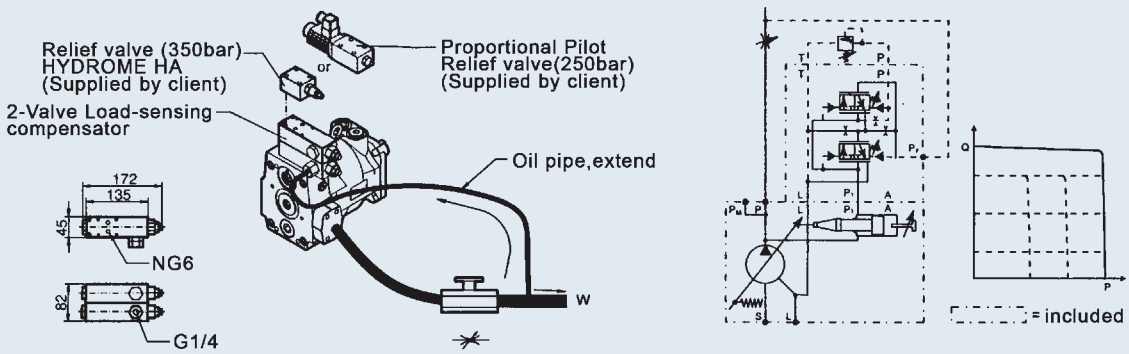

PV SERIES AXIAL PISTON PUMP

Compensator

HA: 2-valve load-sensing compensator (valve included)

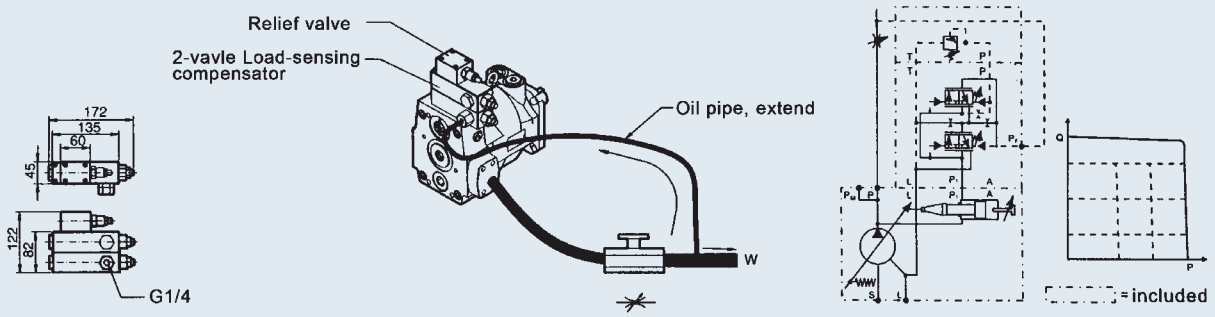

The hydraulic-mechanical horse power compensator consists of a modified remote pressure compensator (Code PG* 、PM*) or of a modified load-sensing compensator (Code PH*) and a pilot valve. This pilot valve is integrated into the pump and is adjusted by a cam sleeve. The cam sleeve has a contour that is designed and machined for the individual displacement and the nominal horse power setting.
At a large displacement the opening pressure (given by the cam sleeve diameter) is lower than at small displacements. This makes the pump compensate along a constant horse power (torque) curve.

For all nominal powers of standard electrical motors HYDROME offers a dedicated cam sleeve. The exchange of this cam sleeve (e. g. : to change horse power setting) can easily be done without disassembly of the pump.
On top of that an adjustment of the horse power setting can be done within certain limits by adjustment the preload of the pilot control cartridge spring.
That allows an adjustment of a constant horse power setting for other than the nominal speeds (1500min-1) or for other horse power.

PA: Horse power compensator

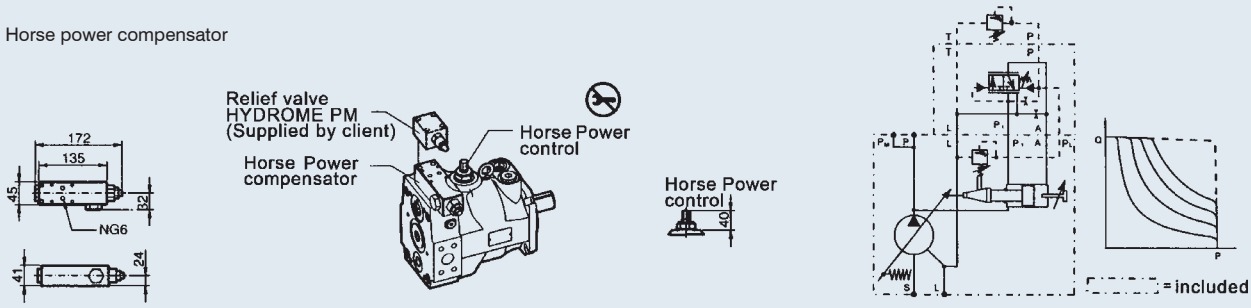

PM: Horse power compensator, pilot flow internal pressure pilot valve included

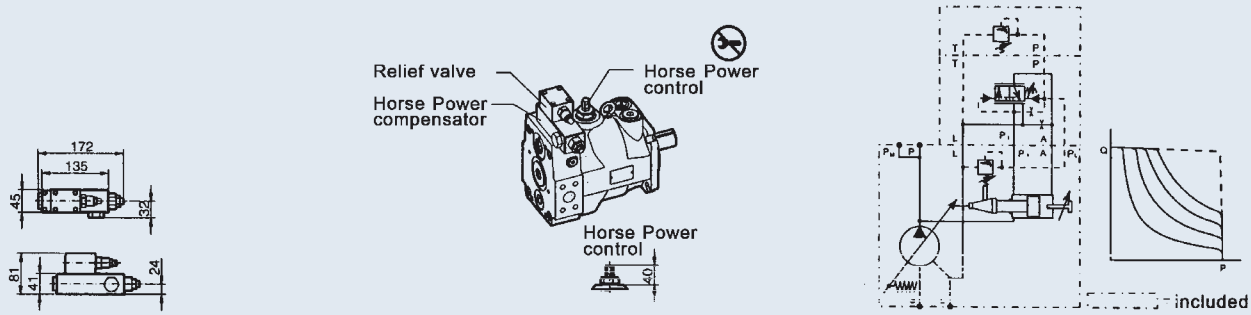

Compensator

PG: Horse power compensator, pilot flow internal

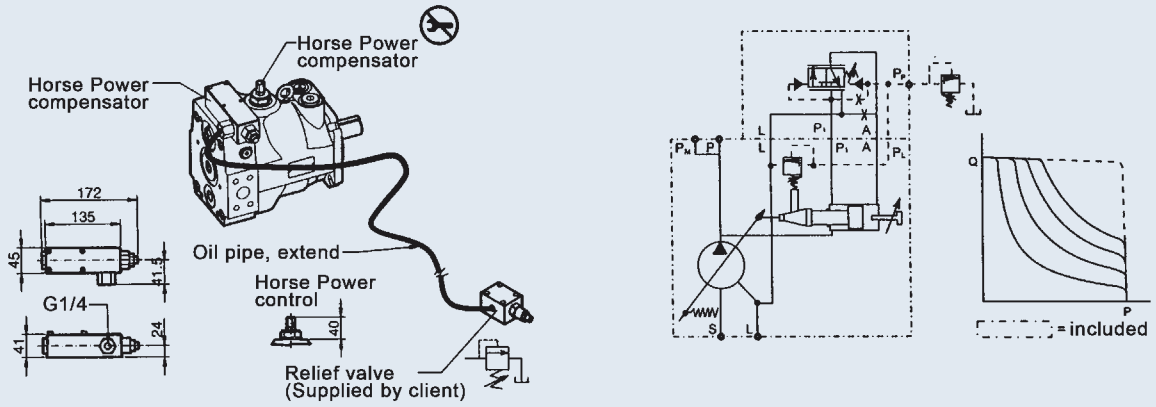

PL: Horse power compensator, Load-sensing compensator

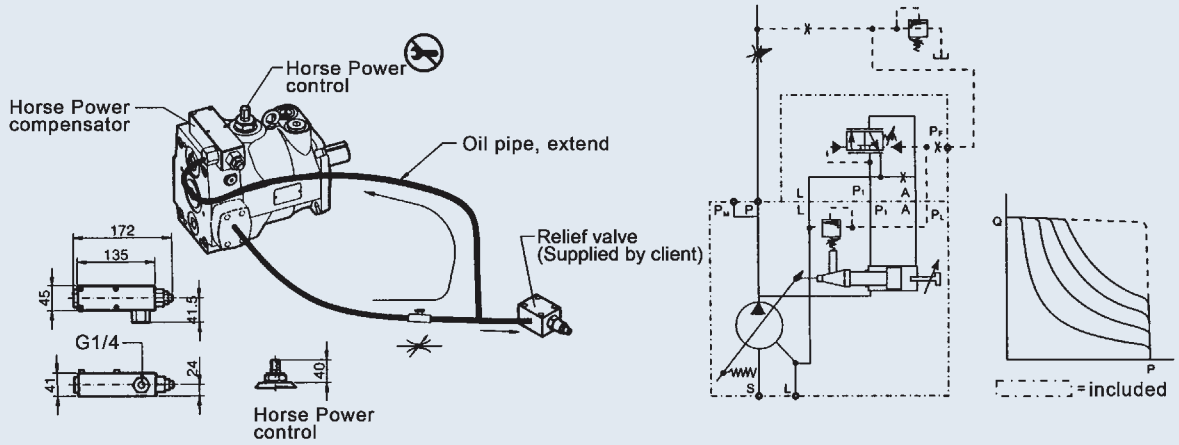

PH: Horse power compensator, pilot flow external for load-sensing

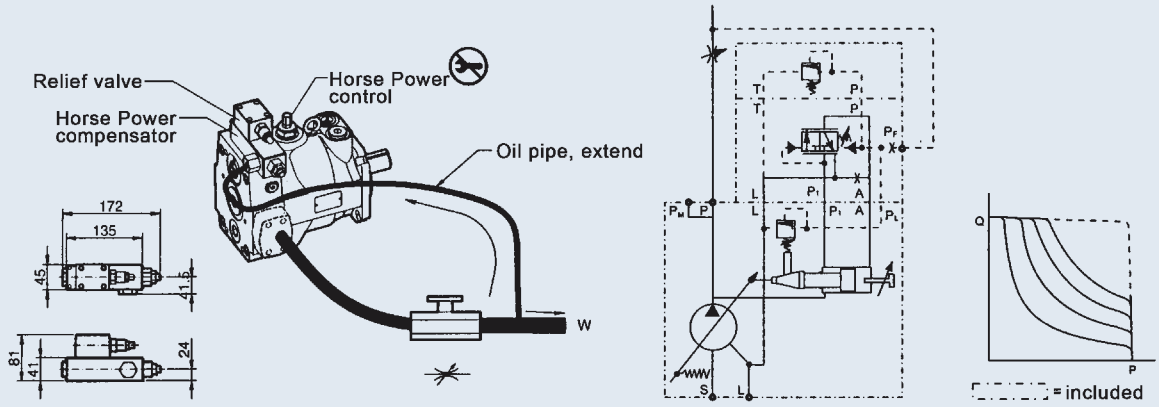

PV SERIES AXIAL PISTON PUMP

Performance curves

B

Horse Power Compensator, diagrams

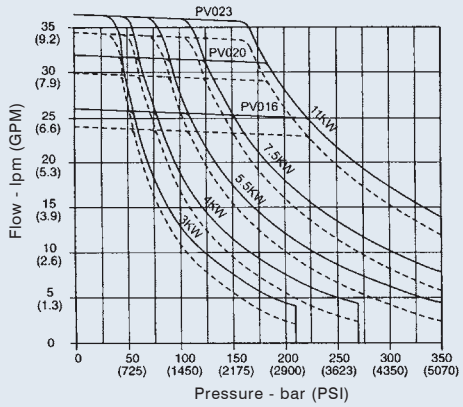

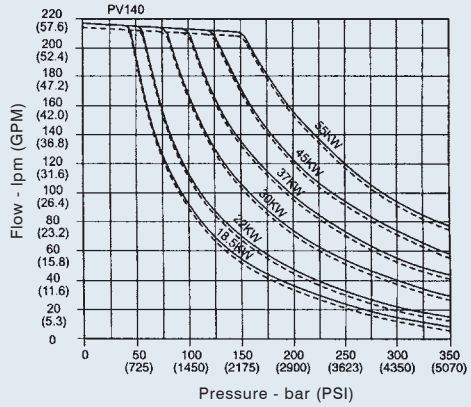

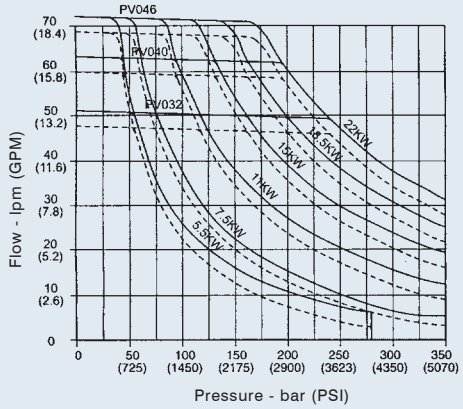

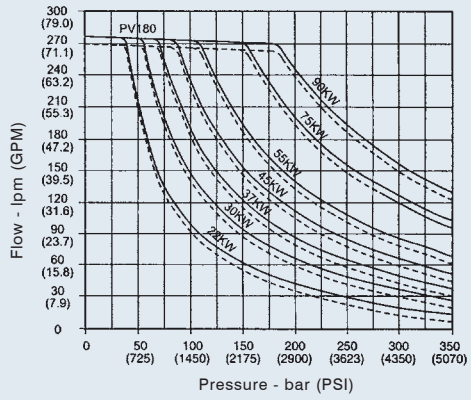

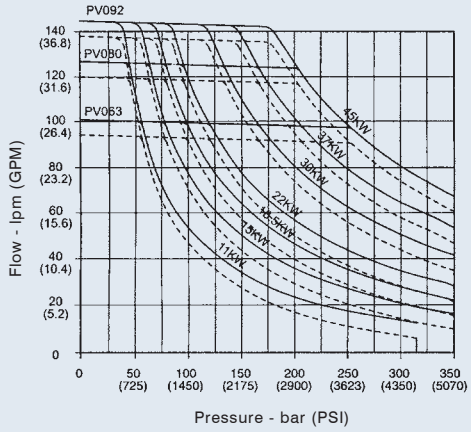

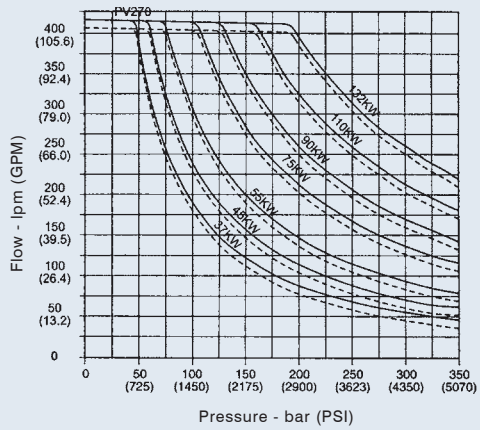

The diagrams shown are only valid for the following working conditions:
speed:n=1500(- -)and 1800(—)rev/min
temperature:t=50℃
fluid:mineral oil HLP, ISO VG46
viscosity:v=46mm/s at 40℃

PV SERIES AXIAL PISTON PUMP

Efficiency And Case Drain Flows PV016-PV023

The efficiency and power graphs are measured at an input speed of n = 1500 min^{-1}, a temperature of 40˚C and a fluid viscosity of 46 mm^2/s. Case drain flow and compensator control flow leave via the drain port of the pump. To the valves shown are to be added 1 to 1.2 lpm, if at pilot operated compensator (code G*, H* horse power compensator and P/Q-control) the control flow of the pressure pilot valve also goes through the pump.
Please note: The valves shown below are only valid for static operation. Under dynamic conditions and at rapid compensator of the pump the volume displaced by the servo piston also leaves the case drain port.
This dynamic control flow can reach up to 40 lpm.
Therefore the case drain line is to lead to the reservoir at full size and without restrictions at short and direct as possible.

Performance curves

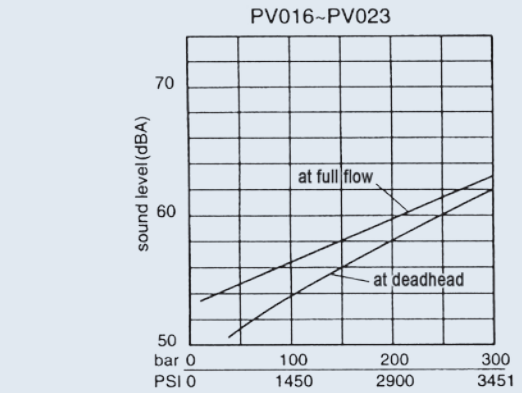

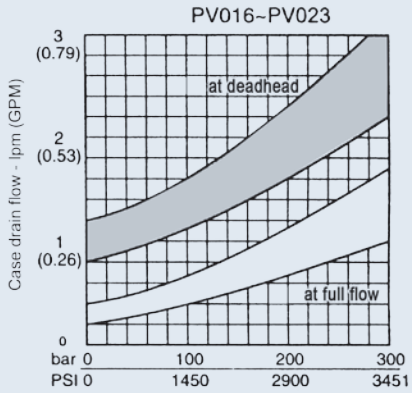

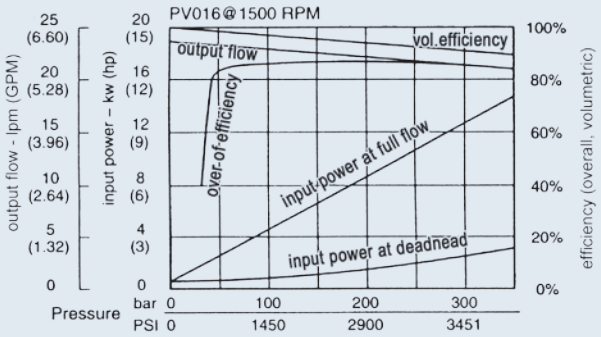

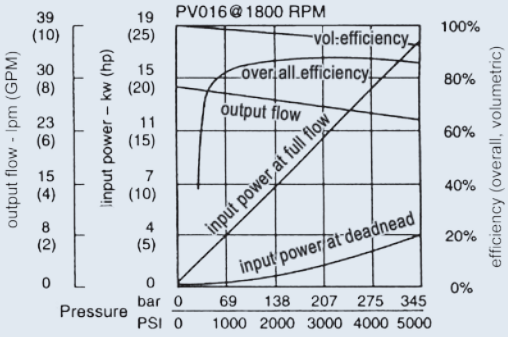

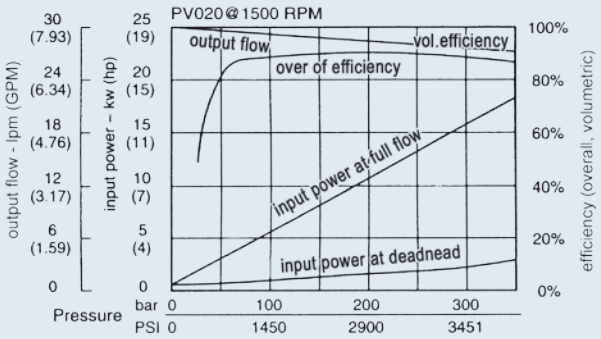

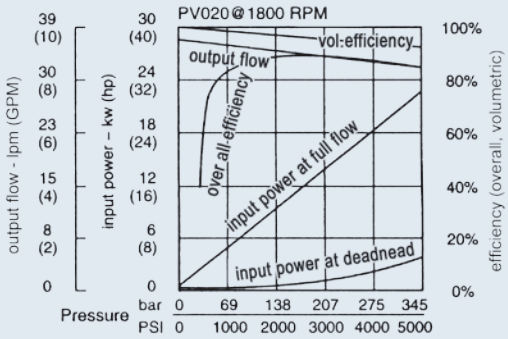

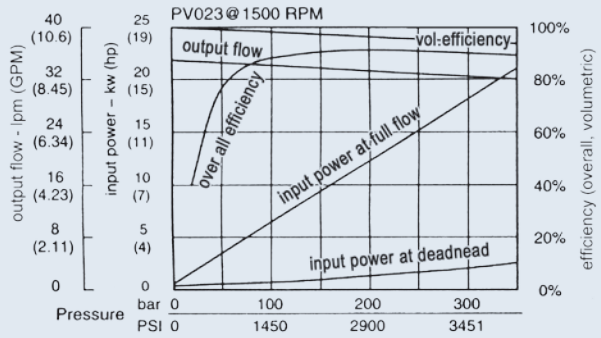

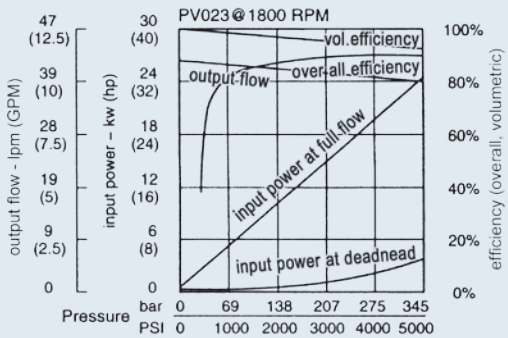

PV SERIES AXIAL PISTON PUMP

Efficiency And Case Drain Flows PV032-PV046

The efficiency and power graphs are measured at an input speed of n = 1500 min^{-1}, a temperature of 40°C and a fluid viscosity of 46 mm^2/s. Case drain flow and compensator control flow leave via the drain port of the pump. To the valves shown are to be added 1 to 1.2 lpm, if at pilot operated compensator (code G*,H* horse power compensator and P/Q-control) the control flow of the pressure pilot valve also goes through the pump.
Please note: The valves shown below are only valid for static operation. Under dynamic conditions and at rapid compensator of the pump the volume displaced by the servo piston also leaves the case drain port.
This dynamic control flow can reach up to 60 lpm.
Therefore the case drain line is to lead to the reservoir at full size and without restrictions at short and direct as possible.

Performance curves

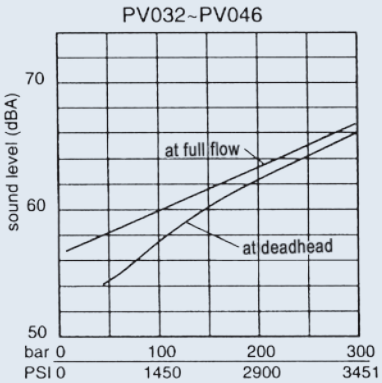

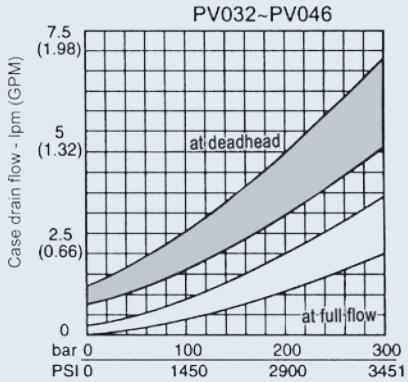

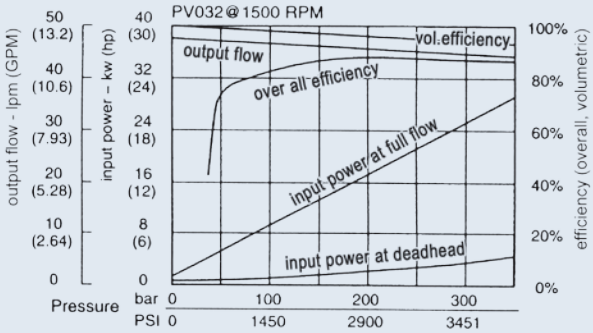

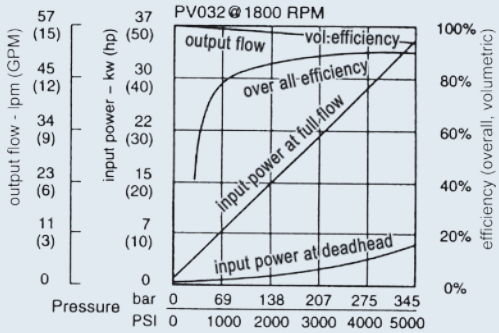

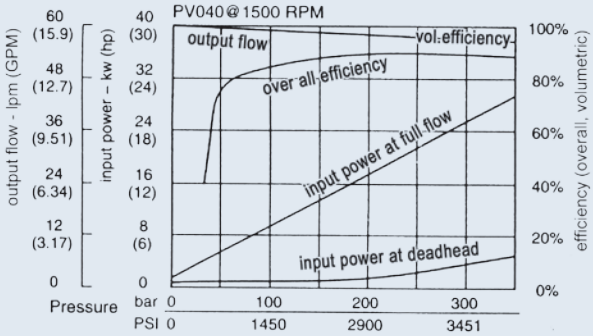

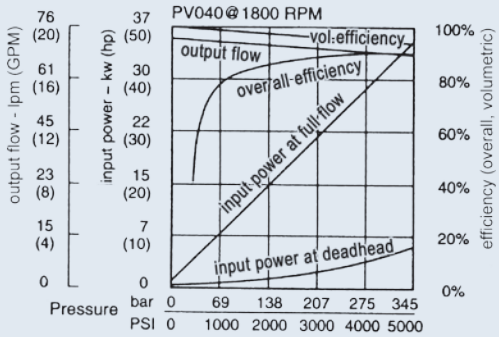

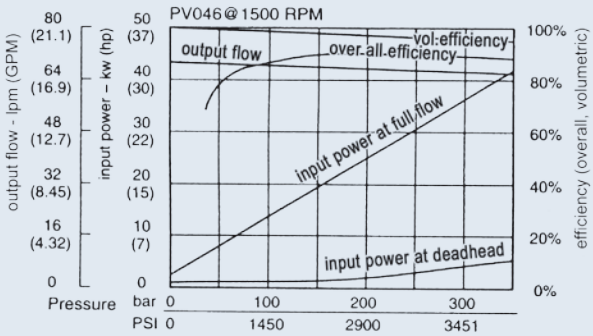

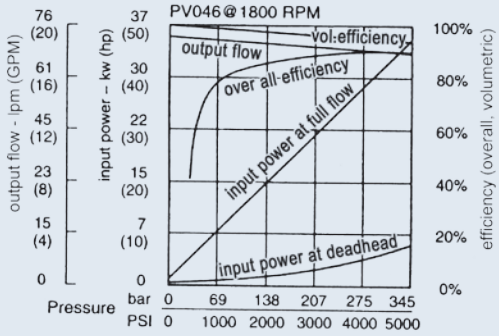

PV SERIES AXIAL PISTON PUMP

Efficiency And Case Drain Flows
PV063, PV080, PV092

The efficiency and power graphs are measured at an input speed of n = 1500 min^{-1}, a temperature of 40°C and a fluid viscosity of 46 mm^2/s. Case drain flow and compensator control flow leave via the drain port of the pump. To the valves shown are to be added 1 to 1.2 lpm, if at pilot operated compensator (code G*, H* horse power compensator and P/Q-control) the control flow of the pressure pilot valve also goes through the pump.
Please note: The valves shown below are only valid for static operation. Under dynamic conditions and at rapid compensator of the pump the volume displaced by the servo piston also leaves the case drain port.
This dynamic control flow can reach up to 80 lpm.
Therefore the case drain line is to lead to the reservoir at full size and without restrictions at short and direct as possible.

Performance curves

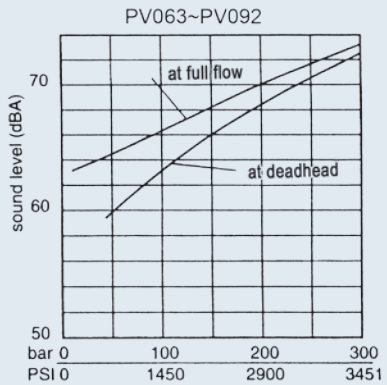

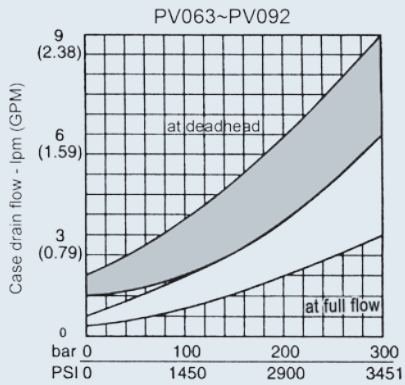

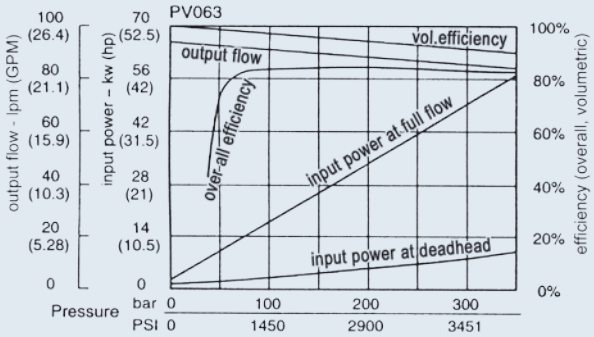

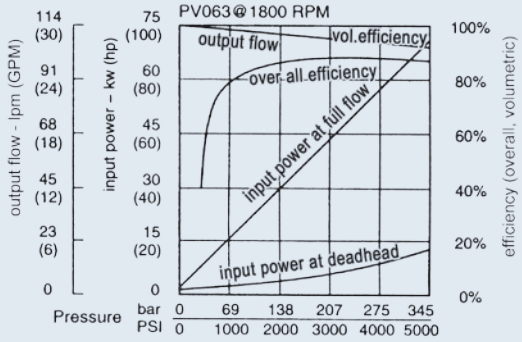

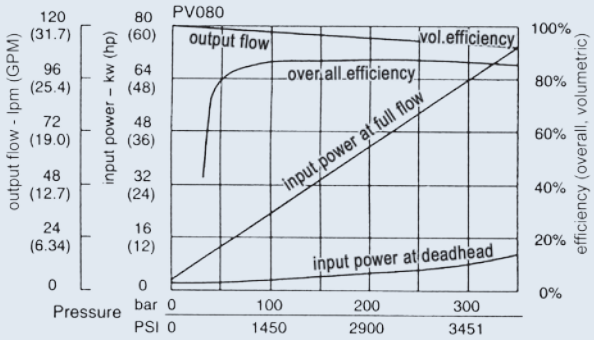

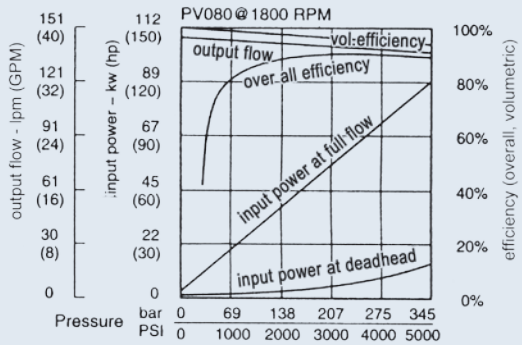

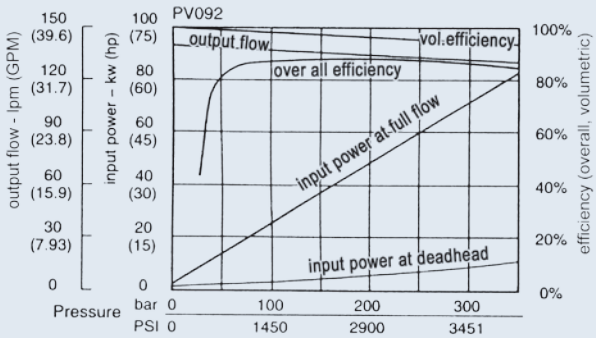

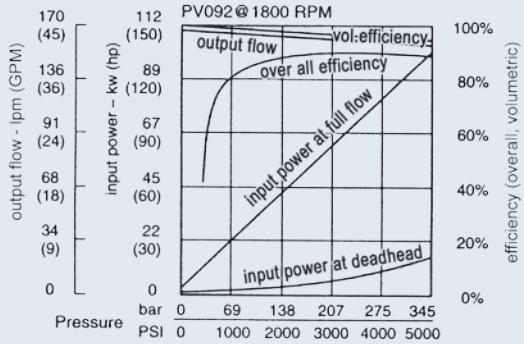

PV SERIES AXIAL PISTON PUMP

Efficiency And Case Drain Flows PV140, PV180

The efficiency and power graphs are measured at an input speed of n = 1500 min^{-1}, a temperature of 40°C and a fluid viscosity of 46 mm^2/s. Case drain flow and compensator control flow leave via the drain port of the pump. To the valves shown are to be added 1 to 1.2 lpm, if at pilot operated compensator (code G*, H* horse power compensator and P/Q-control) the control flow of the pressure pilot valve also goes through the pump.
Please note: The valves shown below are only valid for static operation. Under dynamic conditions and at rapid compensator of the pump the volume displaced by the servo piston also leaves the case drain port.
This dynamic control flow can reach up to 120 lpm.
Therefore the case drain line is to lead to the reservoir at full size and without restrictions at short and direct as possible.

Performance curves

B

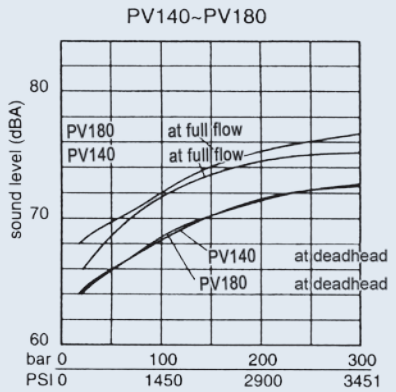

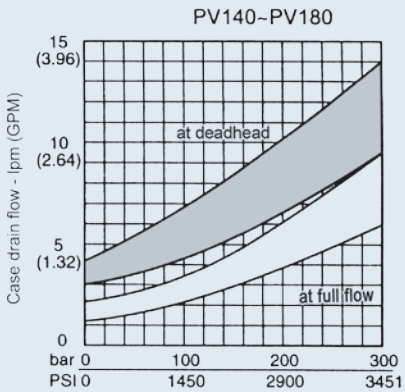

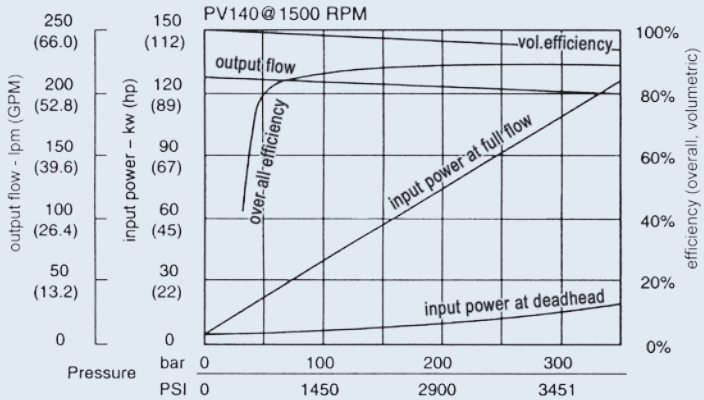

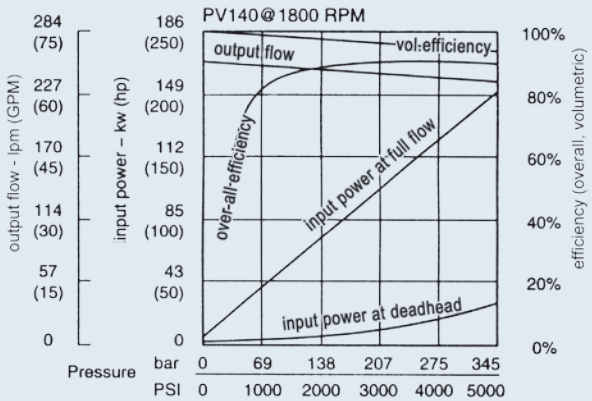

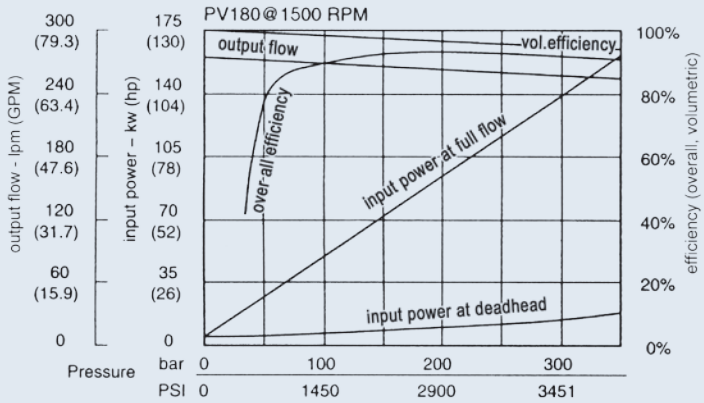

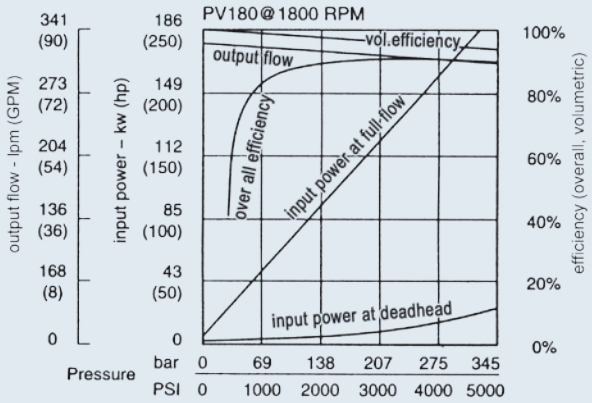

PV SERIES AXIAL PISTON PUMP

Efficiency And Case Drain Flows
PV270

The efficiency and power graphs are measured at an input speed of n = 1500 min^{-1}, a temperature of 40°C and a fluid viscosity of 46 mm^2/s. Case drain flow and compensator control flow leave via the drain port of the pump. To the valves shown are to be added 1 to 1.2 lpm, if at pilot operated compensator (code G*, H* horse power compensator and P/Q-control) the control flow of the pressure pilot valve also goes through the pump.
Please note: The valves shown below are only valid for static operation. Under dynamic conditions and at rapid compensator of the pump the volume displaced by the servo piston also leaves the case drain port.
This dynamic control flow can reach up to 120 lpm.
Therefore the case drain line is to lead to the reservoir at full size and without restrictions at short and direct as possible.

Performance curves

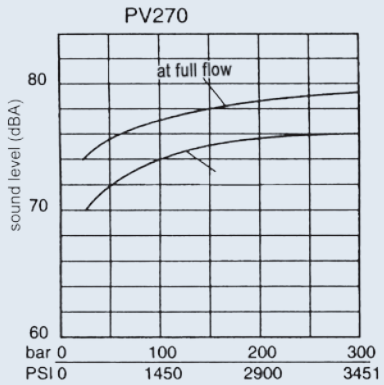

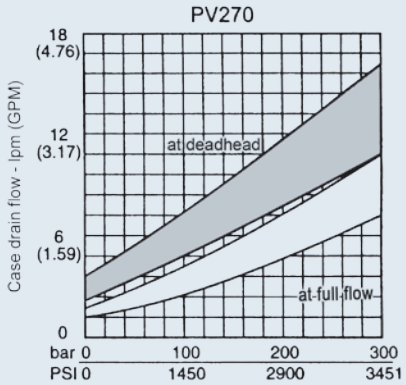

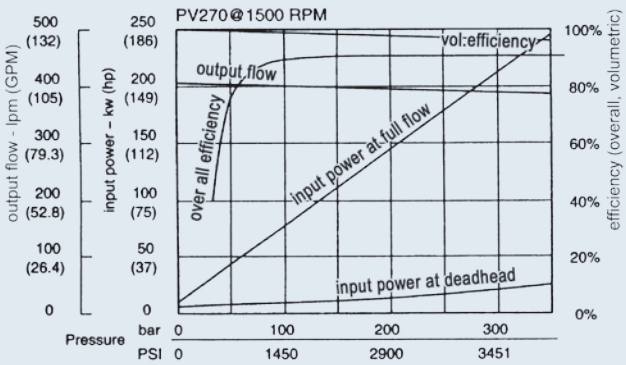

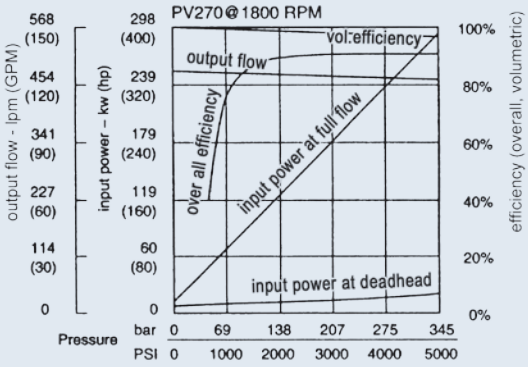

Pump Accessories

Bell housing, coupling and foot flange

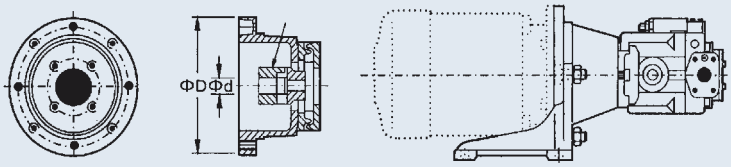

Welding flange, Threaded flange

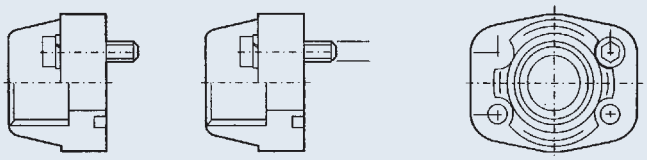

SAE-flange connections, pipe connection in accordance to DIN-2353

Elbow SAE-flange conncetion WFS

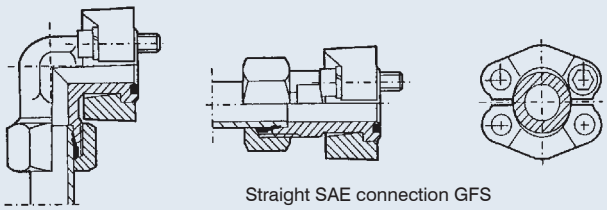

Straight SAE connection GFS

PV SERIES AXIAL PISTON PUMP

Dimensions

PV016~PV023

Mounting: M,N

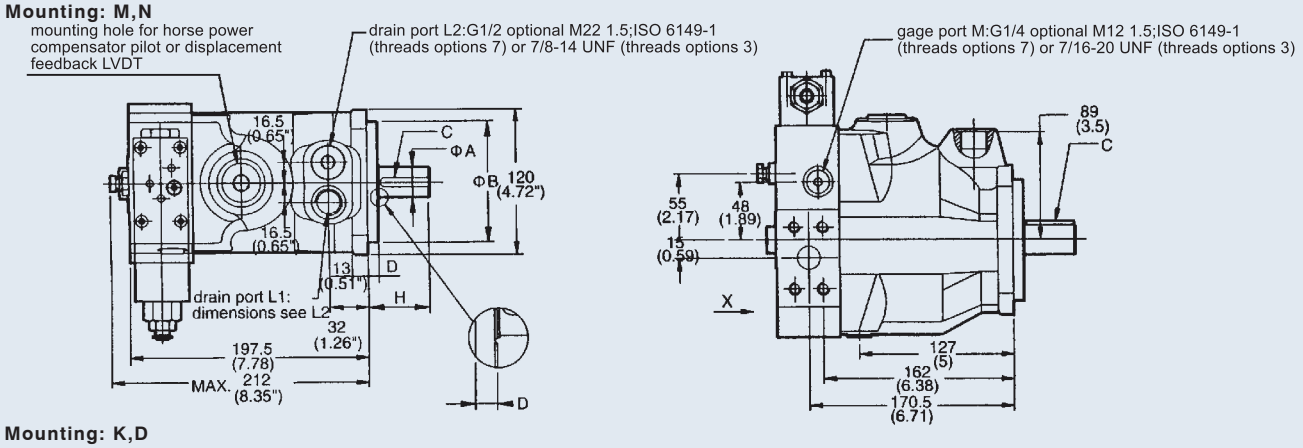

Mounting: K,D

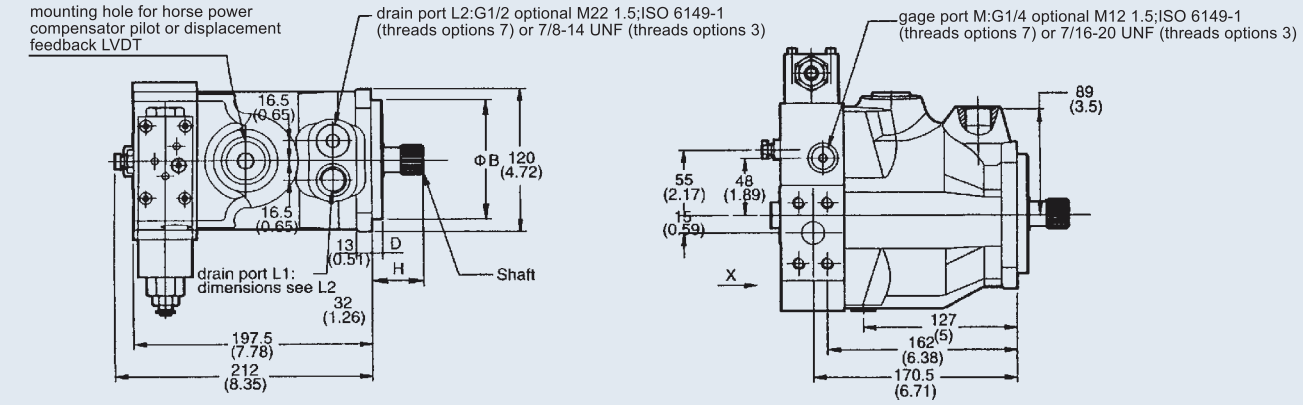

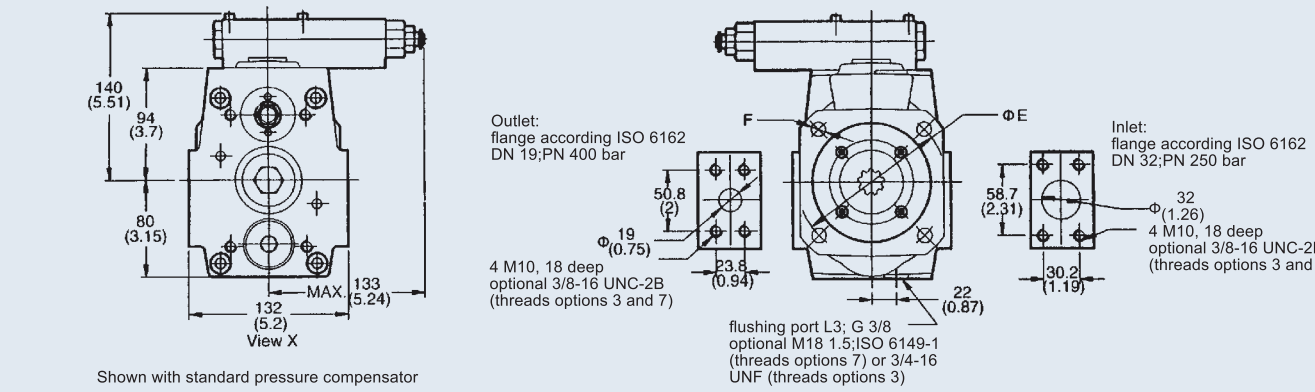

Shown with standard pressure compensator

PV016~PV023 Dimensions

Mounting			øA	øB	C	D	øE	F	H
M (standard)	Metric	ISO 3019/2 Splined, DIN 5480	ø25	ø100 h8	8x7x40	9	125	12	52
N	Inch	ISO3019/2 Cylindric, key	ø25.4 (1")	ø101.6 (4")	6.35x6.35x40 (1/4")	9.4 (0.37")	127 (5")	12 (0.47")	50 (1.97")
Mounting			**Shaft**		**øB**	**D**	**øE**	**F**	**H**
K (standard)	Metric	ISO 3019/2 Cylindric, key	Splined W25x1.5x15x8f DIN 5480		ø100 h8	9	125	12	43
D	Inch	ISO 3019/1 Splined, SAE	Splined 15T 16/32 DP, flat root, side fit ANSI B92.1		ø101.6 (4")	9.4 (0.37")	127 (5")	12 (0.47")	46 (1.81")

PV SERIES AXIAL PISTON PUMP

Dimensions

PV032~PV046

Mounting: M,N

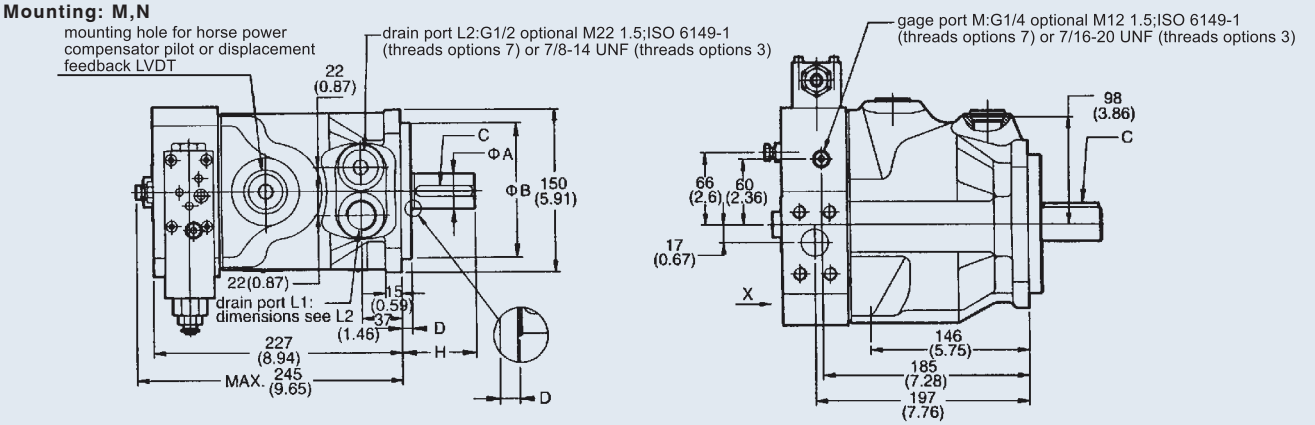

Mounting: K,D

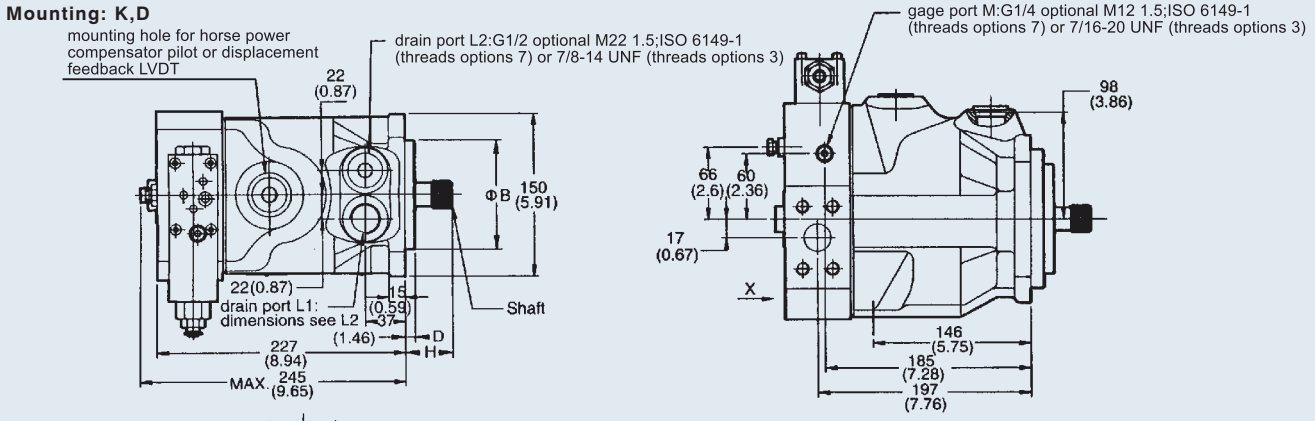

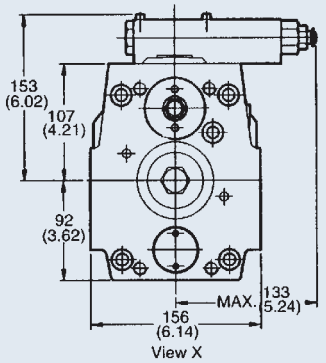

Shown with standard pressure compensator

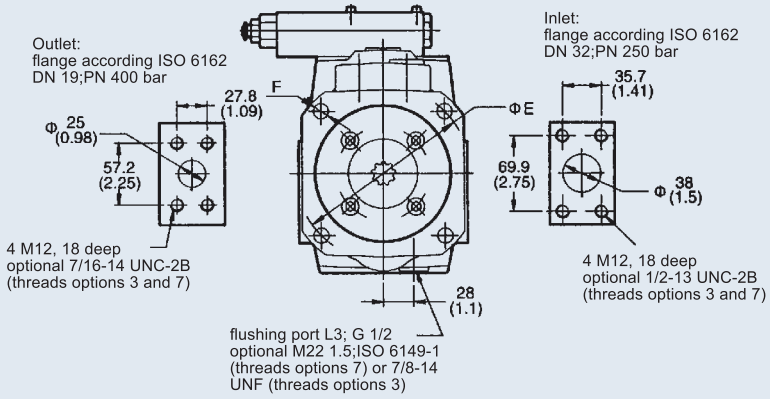

PV032~PV046 Dimensions

Mounting			øA	øB	C	D	øE	F	H
M (standard)	Metric	ISO 3019/2 Splined, DIN 5480	ø32	ø125 h8	10x8x56	9	160	14	68
N	Inch	ISO 3019/2 Cylindric, key	ø31.75 (1.25")	ø127 (5")	7.94x7.94x56 (5/16")	12.7 (0.5")	161.93 (6.38")	14 (0.55")	68 (2.68")
Mounting			**Shaft**		**øB**	**D**	**øE**	**F**	**H**
K (standard)	Metric	ISO 3019/2 Cylindric, key	Splined W32x1.5x20x8f DIN 5480		ø125 h8	9	160	14	47
D	Inch	ISO 3019/1 Splined, SAE	Splined 14T 12/24 DP, flat root, side fit ANSI B92.1		ø127 (5")	12.7 (0.5")	161.93 (6.38")	14 (0.55")	56 (2.31")
D1	Inch	ISO 3019/1 Splined, SAE	Splined 15T 16/32 DP, flat root, side fit ANSI B92.1		ø127 (5")	12.7 (0.5")	161.93 (6.38")	14 (0.55")	56 (2.31")

PV SERIES AXIAL PISTON PUMP

Dimensions

PV063~PV092

Mounting: M,N

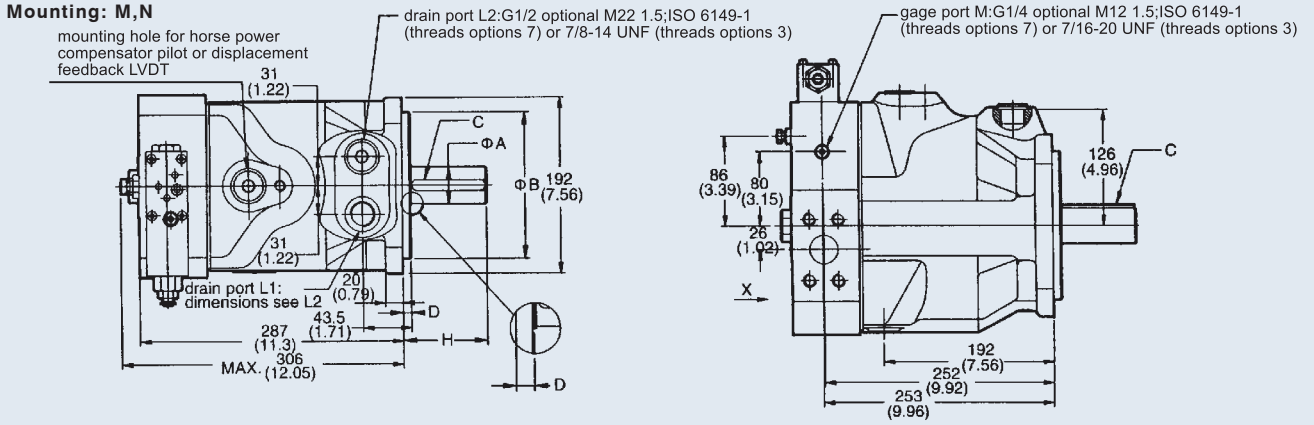

Mounting: K,D

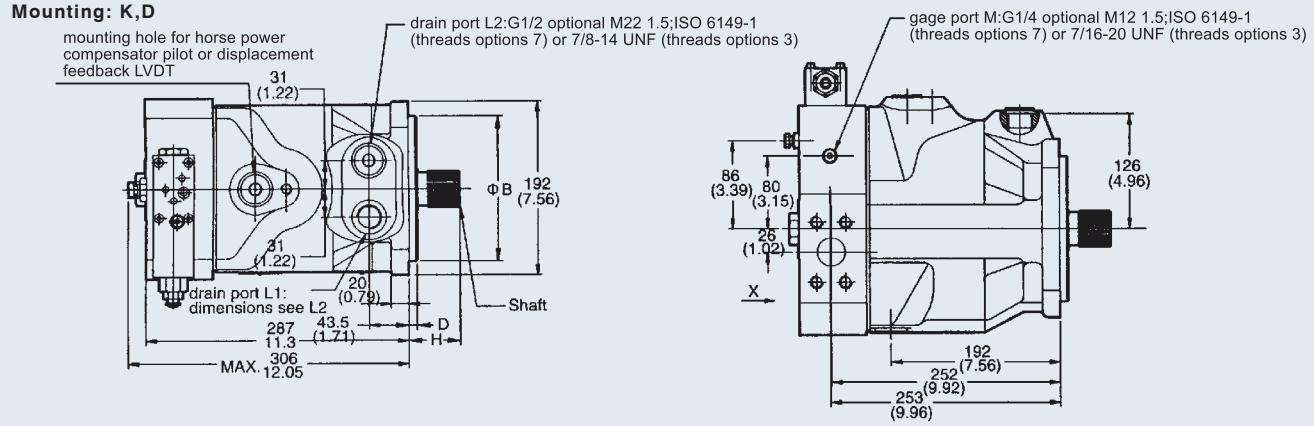

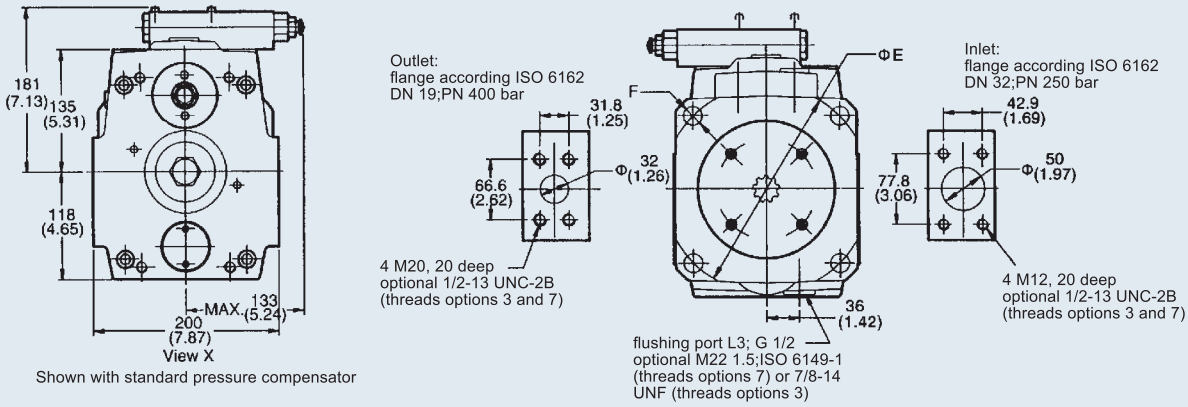

Shown with standard pressure compensator

PV063~PV092 Dimensions

Mounting			øA	øB	C	D	øE	F	H
M (standard)	Metric	ISO 3019/2 Splined, DIN 5480	ø40	ø160 h8	12x8x80	9	200	18	92
N	Inch	ISO 3019/2 Cylindric, key	ø44.45 (1.75")	ø152.4 (6")	11.11x11.11x80 (7/16")	12.7 (0.5")	228.6 (9")	20.6 (0.81")	90 (3.54")
Mounting			**Shaft**		**øB**	**D**	**øE**	**F**	**H**
K (standard)	Metric	ISO 3019/2 Cylindric, key	Splined W40x1.5x25x8f DIN 5480		ø160 h8	9	200	18	56
D	Inch	ISO 3019/1 Splined, SAE	Splined 15T 16/32 DP, flat root, side fit ANSI B92.1		ø152.4 (6")	12.7 (0.5")	228.6 (9")	20.6 (0.81")	75 (2.95")

PV SERIES AXIAL PISTON PUMP

Dimensions

PV140~PV180

Mounting: M,N

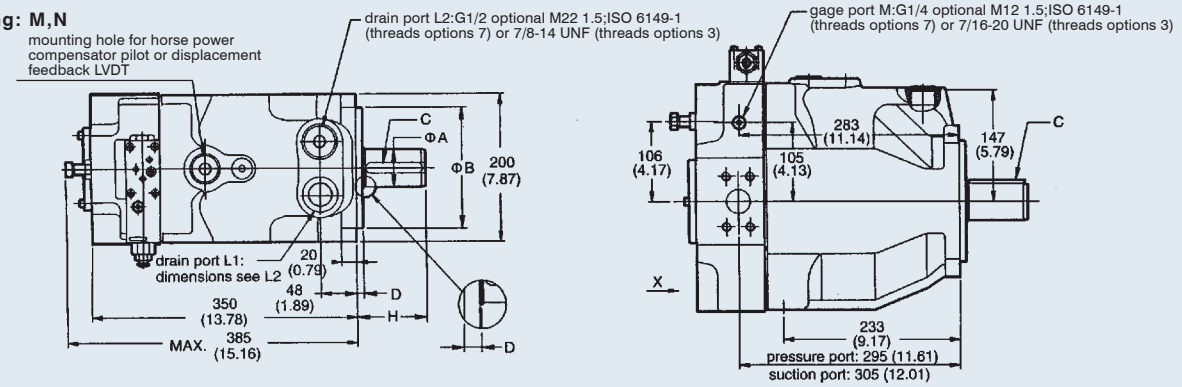

Mounting: K,D

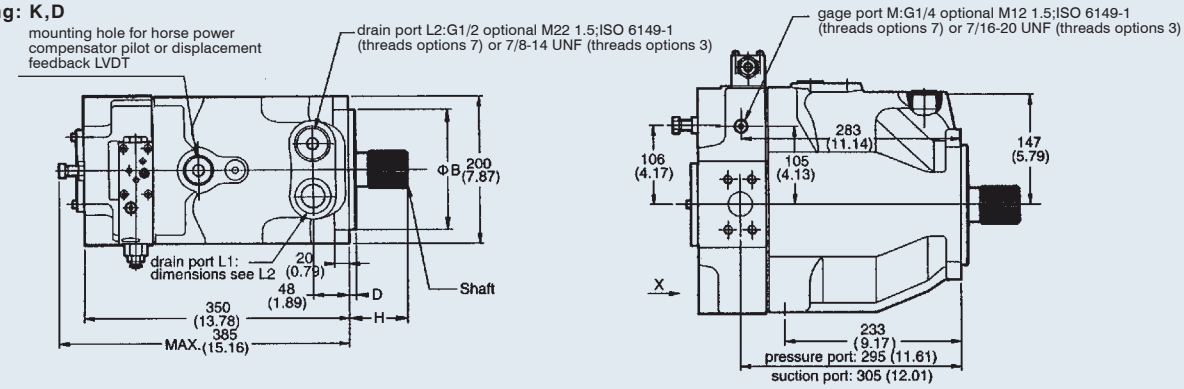

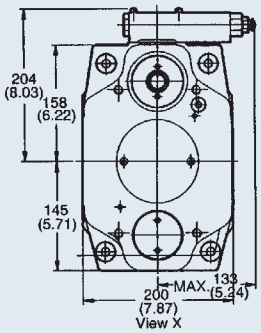

Shown with standard pressure compensator

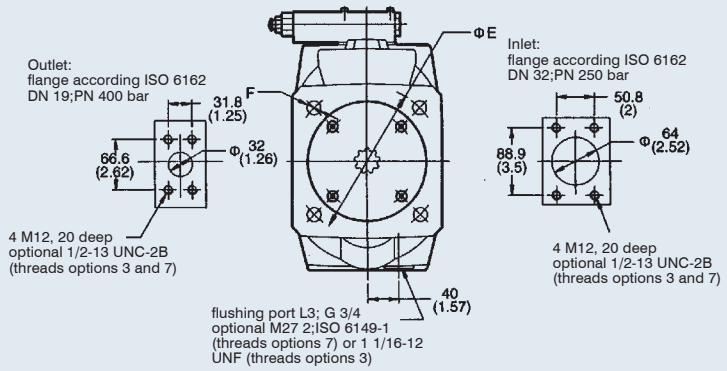

PV140~PV180 Dimensions

Mounting			øA	øB	C	D	øE	F	H
M (standard)	Metric	ISO 3019/2 Splined, DIN 5480	ø50	ø160 h8	14x9x75	9	200	18	92
N	Inch	ISO 3019/2 Cylindric, key	ø50.8 (2")	ø152.4 (6")	12.7x12.7x75 (1/2")	12.7 (0.5")	228.6 (9")	20.6 (0.81")	99.4 (3.91")
F	Inch	ISO 3019/2 Splined, DIN 5480	ø44.45	ø152.4 (6")	11.11x11.11	12.7 (0.5")	228.6 (9")	20.6 (0.81")	75 (2.95")
Mounting			**Shaft**	**øB**		**D**	**øE**	**F**	**H**
H (standard)	Metric	ISO 3019/2 Cylindric, key	Splined W50x2x24x8f DIN 5480	ø160 h8		9	200	18	78
D	Inch	ISO 3019/1 Splined, SAE	Splined 15T 8/16 DP, flat root, side fit ANSI B92.1	ø152.4 (6")		12.7 (0.5")	228.6 (9")	20.6 (0.81")	88 (3.46")
G	Inch	ISO 3019/1 Splined, SAE	Splined 13T 8/16 DP, flat root, side fit ANSI B92.1	ø152.4 (6")		12.7 (0.5")	228.6 (9")	20.6 (0.81")	75 (2.95")

PV SERIES AXIAL PISTON PUMP

Dimensions

PV270

Mounting: M,N

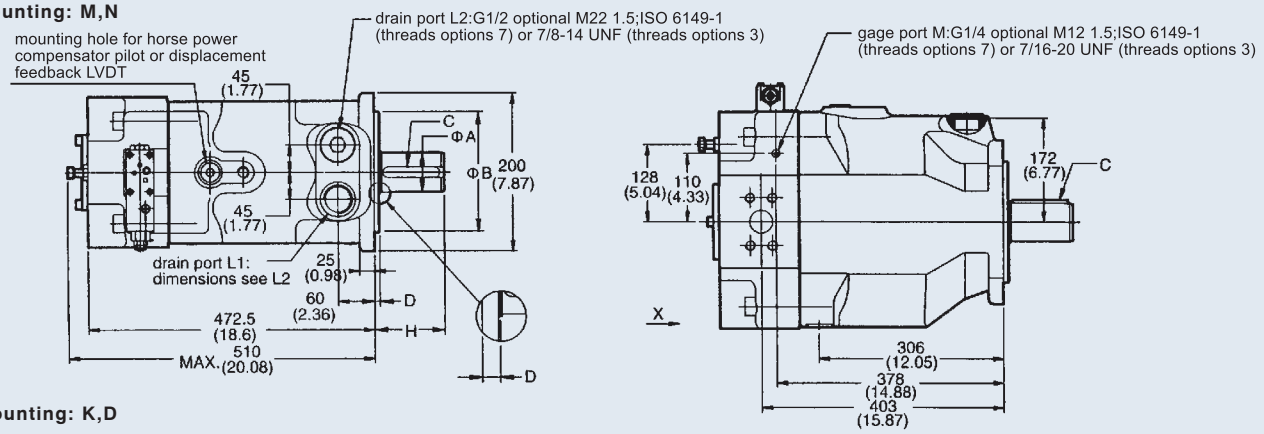

Mounting: K,D

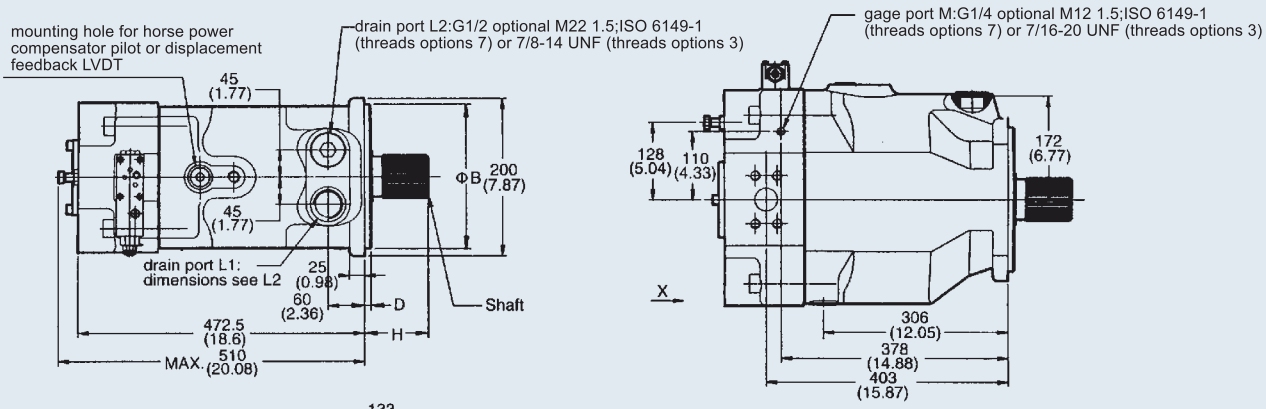

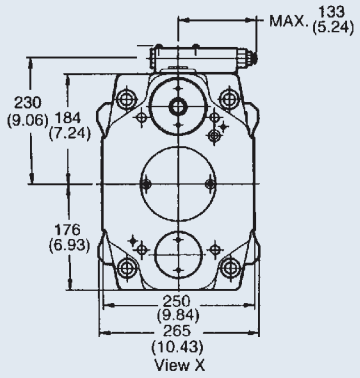

Shown with standard pressure compensator

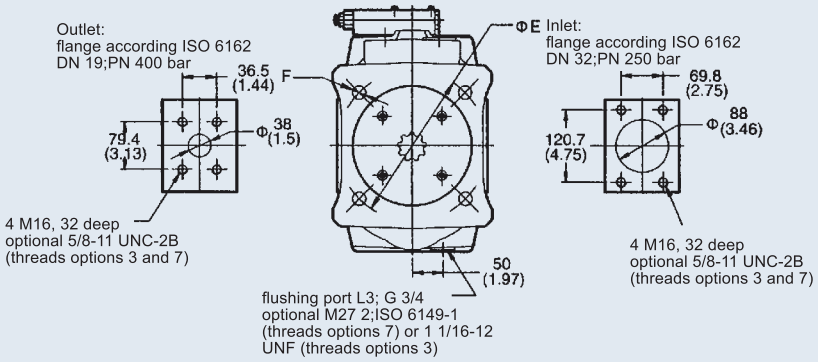

PV270 Dimensions									
Mounting			øA	øB	C	D	øE	F	H
M (standard)	Metric	ISO 3019/2 Splined, DIN 5480	ø65	ø200 h8	18x11x98	9	250	22	115
N	Inch	ISO 3019/2 Cylindric, key	ø50.8 (2")	ø165.1 (6.5")	12.7x12.7x75 (1/2")	15.9 (0.37")	317.5 (12.5")	20.6 (0.81")	97.5 (3.84")
Mounting			Shaft		øB	D	øE	F	H
K (standard)	Metric	ISO 3019/2 Cylindric, key	Splined W60x2x28x8f DIN 5480		ø200 h8	9	250	22	80
D	Inch	ISO 3019/1 Splined, SAE	Splined 15T 8/16 DP, flat root, side fit ANSI B92.1		ø165.1 (6.5")	15.9 (0.37")	317.5 (12.5")	20.6 (0.81")	88(3.46")

Thru drive, shaft load limitations

The max. transferable torque in Nm for the different shafts options are:

Shaft code	PV16~23	PV32~46	PV63~92	PV140~180	PV270
N	300	550	1320	2000	2000
D	300	610	1218	2680	2680
F	-	-	-	1320	-
G	-	-	-	1640	-
M	300	570	1150	1900	2850
K	405	675	1400	2650	3980

B

Important notice

The max. allowable torque of the individual shaft must not be exceeded. For 2-pump combinations there is no problem because PV series offers 100% thru torque. For 3-pump combinations (and more) the limit torque could be reached or exceeded.
Therefore it is necessary to calculate the torque factor and compare it with the allowed torque limit factor in the table.

Required: calculated torque factor <torque limit factor

To make the necessary calculations easier and more user friendly it is not required to calculate actual torque requirements in Nm and compare them with the shaft limitations. The table on the right shows limit factors that include material specification, safety factors and conversion factors.

Pump	Shaft	Torque limit factor
PV016 ~ PV023	N	17700
	D	17700
	M	17700
	K	20130
PV032 ~ PV046	N	32680
	D	36380
	M	33810
	K	40250
PV063 ~ PV092	N	77280
	D	72450
	M	67620
	K	83720
PV140 ~ PV180	N	118400
	D	158760
	F	78750
	G	97650
	M	113400
	K	157500
PV270	N	119000
	D	159700
	M	170100
	K	236250

The total torque factor is represented by the sum of the individual torque factors of all pumps in the complete pump combination.

Total torque factor of the comination= sum of individual torque factors of all pumps

The torque factor of each individual pump is calculated by multiplying the max. operating pressure p of the pump (in bar) with the max. displacement Vg of the pump (in cc/rev)

Torque factor of any pump=P x Vg (Pressure in bar x displacement in cc/rev)

PV SERIES AXIAL PISTON PUMP

Decomposition Chart

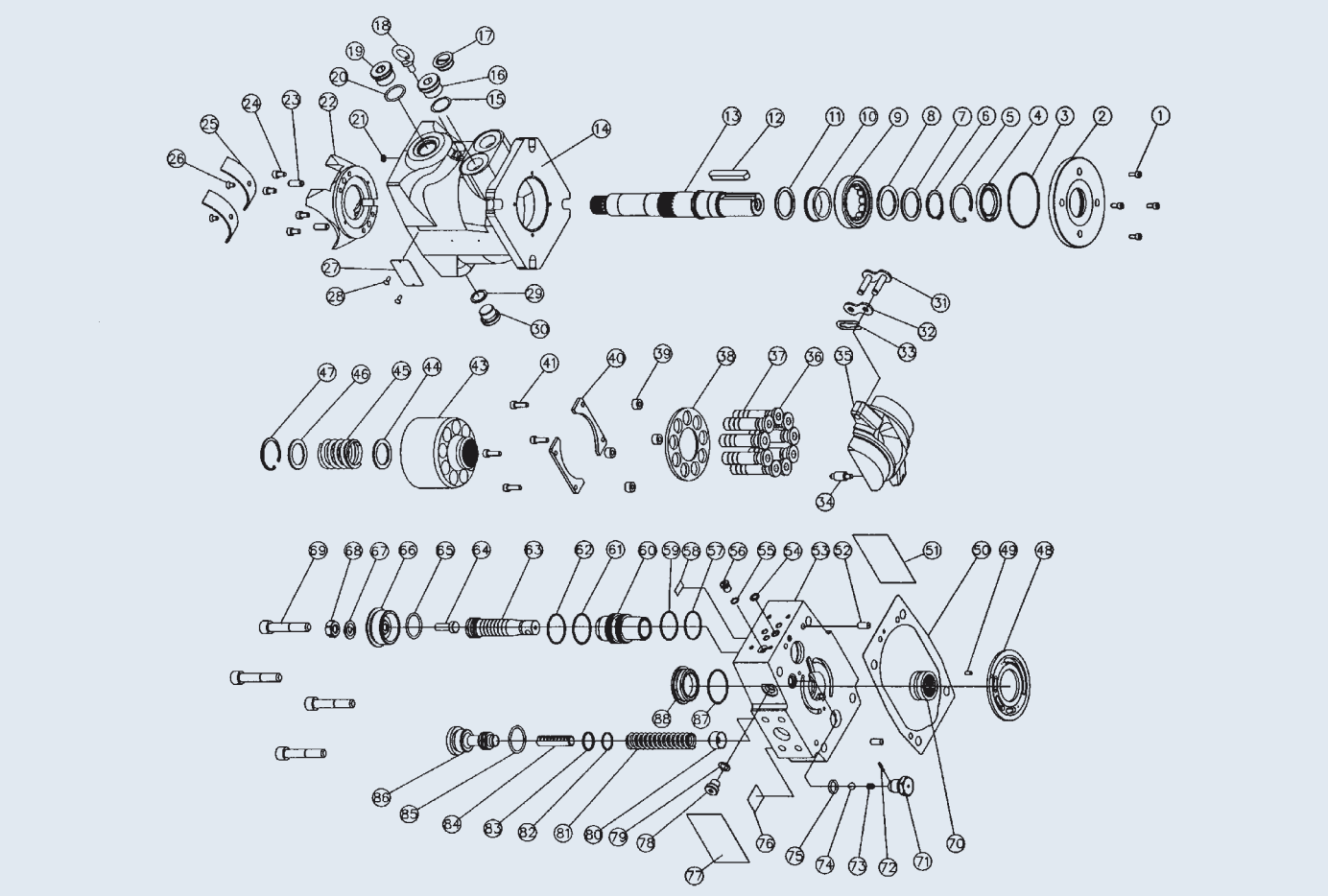

List of parts

No.	Description	Quantity	No.	Description	Quantity	No.	Description	Quantity	No.	Description	Quantity
1	Head cap screw	4	23	Pin	2	46	Washer	1	68	Piston nut	1
2	Pilot cover	1	24	Screw	4	47	Snap ring	1	69	Screw	1
3	O-ring	1	25	Trunnion bearing	2	48	Valve plate	1	70	Trunnion bearing	1
4	Shaft seal	1	26	Screw	2	49	Pin	1	71	Plug	1
5	Snap ring	1	27	Name plate	1	50	Seal	1	72	Pin	1
6	Snap ring	1	28	Rivet	2	51	Seal	1	73	Spring	1
7	Washer	1	29	O-ring	1	52	Pin	1	74	Ball	1
8	Washer	1	30	Plug	1	53	Pump body	2	75	O-ring	2
9	Roller bearing	1	31	Chain link	1	54	O-ring	1	76	Label	1
10	Roller bearing	1	32	Chain link	1	55	O-ring	1	77	Seal	1
11	Roller bearing	1	33	Chain link	1	56	Plug	1	78	Plug	1
12	Key	1	34	Connector servo spring	1	57	O-ring	1	79	O-ring	1
13	Shaft	1	35	Swash plate	1	58	Label	1	80	Washer	1
14	Pump body	1	36	Piston	9	59	O-ring	1	81	Spring	1
15	O-ring	1	37	Piston	9	60	Servo pistion sleeve	1	82	O-ring	1
16	Plug	1	38	Slipper segment	1	61	O-ring	1	83	O-ring	1
17	Plug	1	39	Washer	4	62	O-ring	1	84	Pin	1
18	Ring	1	40	Retainer segment	2	63	Servo piston	1	85	O-ring	1
19	Plug	1	41	Screw	4	64	Set screw	1	86	Screw	1
20	O-ring	1	43	Cylinder block	1	65	O-ring	1	87	O-ring	1
21	O-ring	1	44	Washer	1	66	Servo spring cover	1	88	Spring cover	1
22	Cradle	1	45	Spring	1	67	Washer	1			

PV SERIES AXIAL PISTON PUMP

General installation information

1. Fluid recommendations

Premium quality hydraulic mineral oil fluids are recommended, like H-LP oils to DIN 51524, part 2. The viscosity range should be 25 to 50 s mm^2/(cst) at 50°C. Operating temperatures -10 to +70°C. For other fluids such as phosphoric acid esters or for, other operating conditions consult HYDROME for assistance.

2. Seals

NBR (Nitrile) seals are used for operation with hydraulic fluids based on mineral oil. For synthetic, as perhaps phosphoric acid esters, Fluorocarbon seals are required. Consult HYDROME for assistance.

3. Filtration

For maximum pump and system component functionability and life, the system should be protected from contamination by effective filtration. Fluid cleanness should be in accordance with ISO classification ISO 4406. The quality of filter elements should be in accordance with ISO standards.

(1) Minimum requiremenet for filtration rate x (um):
General hydraulic systems for satisfactory operation:
Class 19/15, to ISO 4406. X=25 μm(ß10≥75) to ISO 4572

(2) Hydraulic systems with maximized component life and functionability:
Class 16/13, to ISO 4406. X=10 μm(ß10≥75) to ISO 4572
It is recommended to use return line or pressure filters. HYDROME Filter Division offers a wide range of these filters for all common applications and mounting styles. The use of suction filters should be avoided, especially with fast response pumps. Bypass filtration is a good choice for best filter efficiency.

4. Installation and mounting

Horizontal mounting: Outlet port side or top. Inlet port side or bottom, drain port always uppermost.
Vertical mounting: Shaft pointing upwards.
Install pump and suction line in such a way that the maximum inlet vacuum never exceeds 0.8 bar absolute.
The inlet line should be as short and as straight as possible. A short suction line cut to 45° is recommended when the pump is mounted inside the reservoir, to improve the inlet conditions. All connections to be leadfree, as air in the suction line will cause cavitations, noise, and damage to the pump.

5. Shaft rotation and alignment

Pump and motor shafts must be aligned within 0.25mm T.I.R. maximum. A floating coupling must be used.
Bell housings and couplings can be ordered at manufacturers listed in this catalogue. Please follow the coupling manufacturer's installation instructions.
Consult HYDROME for assistance on radial load type drives.

6. Start up

Prior to start up, the pump case must be filled with hydraulic fluid (use case drain port). Initial start up should be at zero pressure with an open circuit to enable the pump to prime. Pressure should only be increased once the pump has been fully primed.
Attention: Check motor rotation direction.
Operating noise of pumps
The normal operating noise of a pump and consequently the operating noise of the entire hydraulic system is largely determined by where and how the pump is mounted and how it is connected to the down stream hydraulic system. Also size, style and installation of the hydraulic tubing have a major influence on the overall noise emitted by a hydraulic system.

Noise reduction measures
Flexible elements help to prevent pump body vibration being transmitted to other construction elements, where possible amplification may occur, Such elements can be:
Bell housing with elastic dampening flange with vulcanized labyrinth ①

(1)Floating and flexible coupling ②

(2)Damping rails ③

(3)Or silent blocks for mounting the electric motor or the foot mounting flange

(4)Flexible tube connections (compensators) or hoses on inlet, outlet and drain port of the pump.

(5)Exclusive use of gas tight tube fittings for inlet connections to avoid ingression of air causing cavitations and excessive noise.

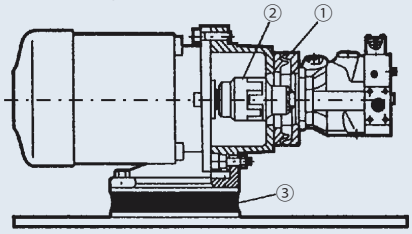

7. Drain line

The drain line must lead directly to the reservoir without restriction. The drain line must not be connected to any other return line. The end of the drain line must be below the lowest fluid level in the reservoir and as far away as possible from the pump inlet line. This ensures that the pump does not empty itself when not in operation and that hot aireated oil will not be recirculated. For the same reason, when the pump is mounted inside the reservoir, the drain line should be arranged in such a way that a siphon is created. This ensures that the according to the port size and a straight low pressure fitting with maximized bore should be used.

	PV016~PV023	PV032~PV046	PV063~PV092	PV140~PV180	PV270
Size of pipe joints	3/8 (ø8.5 or more)	1/2 (ø12 or more)	3/4 (ø16 or more)	1 (ø19 or more)	1-1/4 (ø22 or more)
I.D. of pipes	ø12 or more	ø15 or more	ø19 or more	ø25 or more	ø32 or more
Length of drain	Under 1m	Under 1m	Under 1m	Under 1m	Under 1m

PV SERIES TANDEM AXIAL PISTON PUMP

B

Dimensions

Pump Combination PV

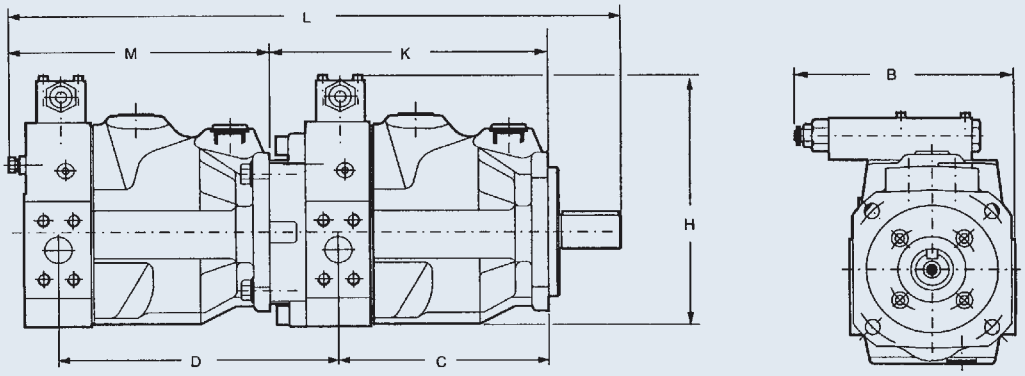

Main pump	Second pump	Interface main pump	L	B	C	D	H	K	M
PV16, 20, 23	PV16, 20, 23	100 B4 HW	489	196	170.5	225	220	225	212
PV32, 40, 46	PV16, 20, 23 PV32, 40, 46	125 B4 HW	541 574	208 208	197 197	235.5 261	245 245	261 261	212 245
PV63, 80, 92	PV16, 20, 23 PV32, 40, 46 PV63, 80, 92	160 B4 HW	630 663 724	232 232 232	252 252 252	244.5 271 326	299 299 299	326 326 326	212 245 306
PV140, 180	PV16, 20, 23 PV32, 40, 46 PV63, 80, 92 PV140, 180	160 B4 HW	719 752 813 878	230 230 230 230	305 305 305 305	280.5 307 362 415	349 349 349 349	415 415 415 415	212 245 306 385
PV270	PV16, 20, 23 PV32, 40, 46 PV63, 80, 92 PV140, 180 PV270	200 B4 HW	860 893 954 1033 1134	255 255 255 255 255	403 403 403 403 403	299 325.5 380.5 433.5 531.5	406 406 406 406 406	531.5 531.5 531.5 531.5 531.5	212 245 306 385 510

Combination PV140/180+PV140/180 and PV270+PV270 only with splined shaft on main pump due to high torque

PV pump with thru drive

List of parts

No.	Description
1	Connector
2	Coupling
3	Seal
4	Seal
5	Coupling

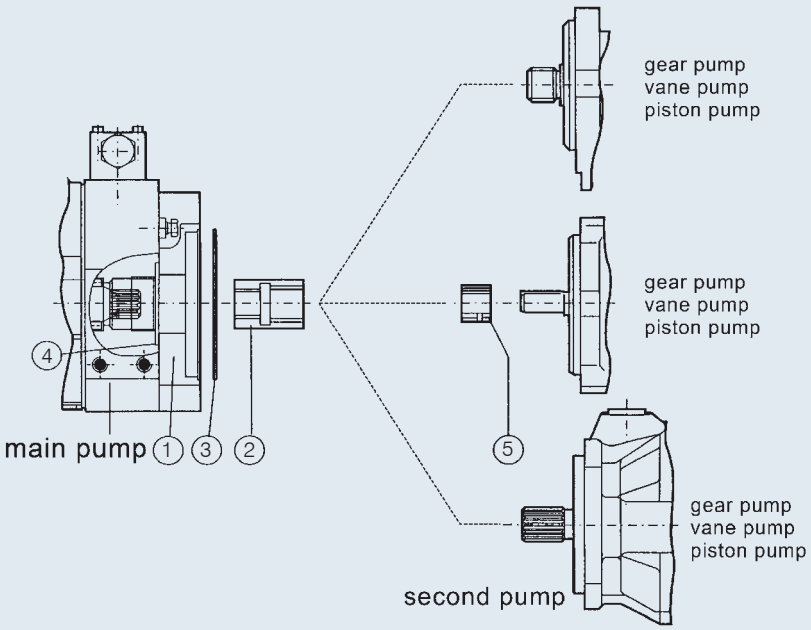

PVS, PZS SERIES VARIABLE VOLUME PISTON PUMP

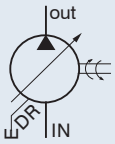

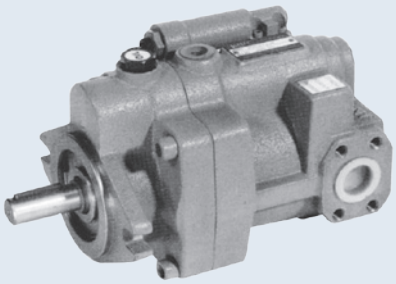

How to order

PVS - 1 B - 16 N 2 - R - ※
1 2 3 4 5 6 7 8

1	PVS: Pump size 0, 1, 2 PZS: Pump size 3, 4
2	Pump sizes: 0: 8 cc/rev 1: 16, 22 cc/rev 2: 36, 46 cc/rev 3: 70 cc/rev 4: 100 cc/rev
3	Mounting Type: B: Flange type (normal) A: Foot type
4	Displacement: 8, 16.5, 22, 36, 46, 70, 100 cc/rev
5	Control types standard type: N Option type: P, NQ, RS (RA), WS (WA), HL
6	Pressure adjusting PVS 0: 20-40 bar 1: 20-73 bar 2: 30-145 bar 3: 30-215 bar PZS 1: 20-73 bar 3: 30-215 bar 4: 30-286 bar
7	Shaft rotation (viewed from shaft end) R: Clockwise L: Counter clockwise
8	Shaft type none: Cylindric, key S: Splined, SAE

B

Specifications

Model	Displacement cc/rev	Unloading Conditions (lpm)			Pressure Adj. Range bar	Max . Pressure bar	Input Speed Range (rpm)		Weight (kg)
		1200 rpm	1500 rpm	1800 rpm			Min.	Max.	
PVS-0B-8	8	9.6	12	14.4	0: 20-40	255	500	2000	9
PVS-1B-16	16.5	19.8	24.7	29.7	1: 20-73				12
PVS-1B-22	22	26.4	33	39.6	2: 30-145				12
PVS-2B-35	36	43.2	54	64.8	3: 30-215				23
PVS-2B-45	46	55.2	69	82.8					23
PZS-3B-70	70	84	105	126	1: 20-73 3: 30-215 4: 30-286	286		1800	41
PZS-4B-100	100	120	150	180					60

Dimensions

PVS-0B-8N

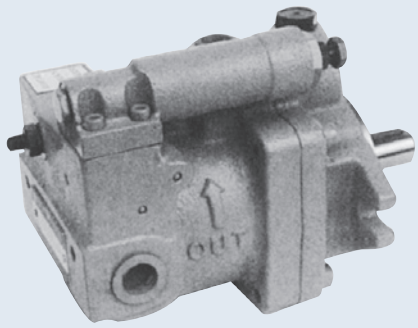

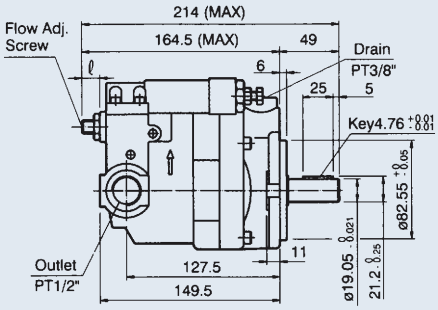

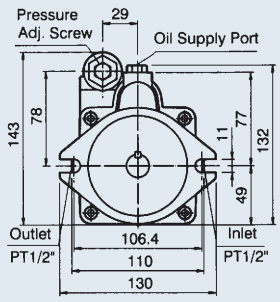

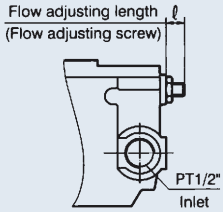

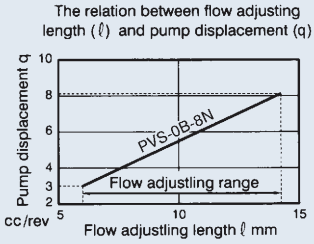

PVS, PZS SERIES VARIABLE VOLUME PISTON PUMP

Control Types

Type	External View	JIS Symbols	Characteristics	Description
N	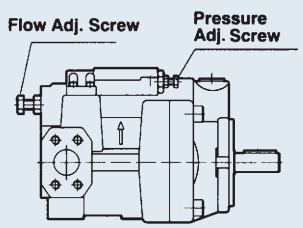	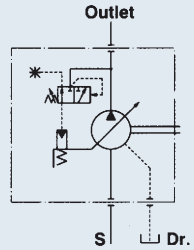	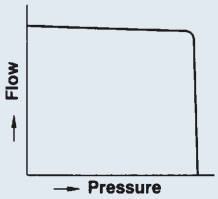	**Pressure Compensating Type (Manual)** 1. When the pressure reaches the value set with the compensator, the flow is reduced automatically and the set pressure is maintained. 2. The pressure and flow are controlled manually.
P	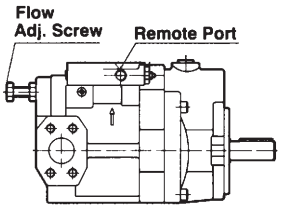	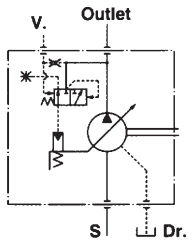	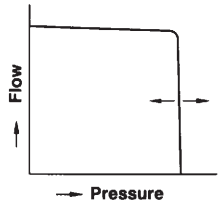	**Remote Pressure Control Type** 1. The pressure can be controlled according to the pilot pressure. 2. The flow can be controlled manually.
NQ	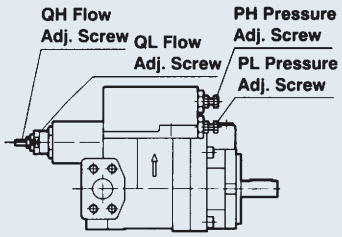	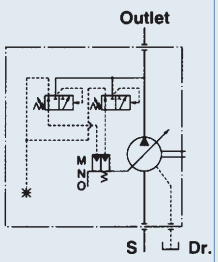	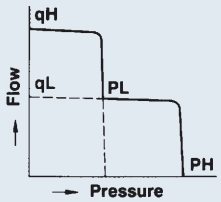	**Two Pressure-Two Flow Control Type** 1. By means of the sequence valve, two stage flow rate can be obtained and each flow rate has the different pressure eventually enabling energy savings.
RS (RA)	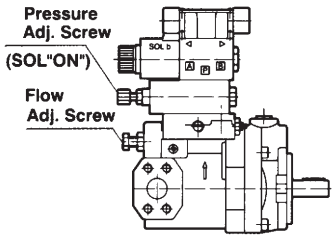	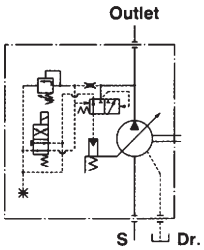	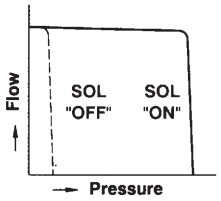	**Solenoid Cut-Off Control Type** 1. An unloading solenoid valve is used to minimize the lost energy when the pump output is not required. 2. Heat generated is very small.
WS (WA)	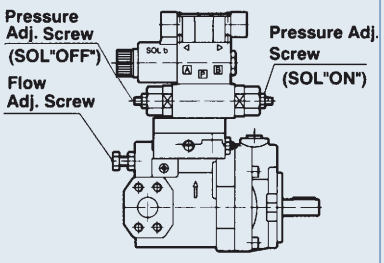	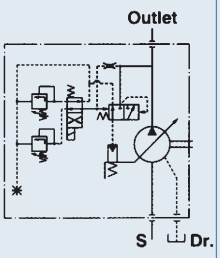	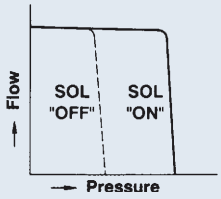	**Two Pressure Cut-Off Control Type** 1. By means of "ON" "OFF" control of solenoid valves, two different pressure compensating types can be obtained.
HL	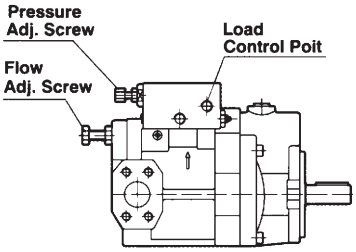	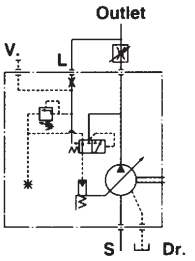	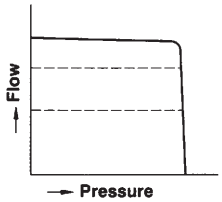	**Load Sensing Control** 1. The "HL" compensator is used for load sensing circuits and is a true load sensor. This is the "P" compensator with a pin in the compensator spool. The pin prevents pilot flow from entering the circuit which will eliminate creeping of the load. 2. The "HL" compensator will let the pump deliver a constant flow rate to the circuit by providing an adjustable ΔP across the customers orifice or valve. The pump will operate at 17.2~27.5 bar (250-400 psi) above "Load pressure".

B

Dimensions

PVS-1B-16N, PVS-1B-22N

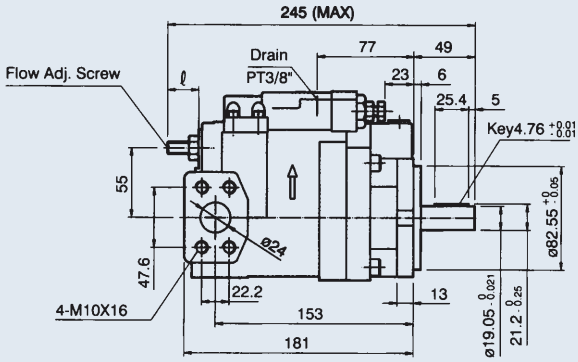

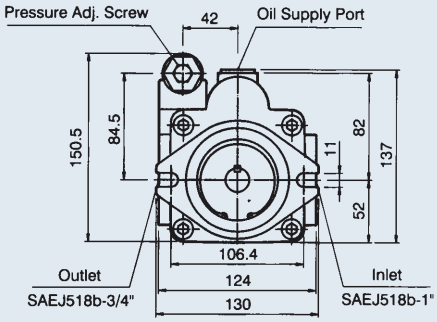

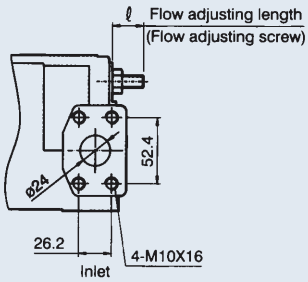

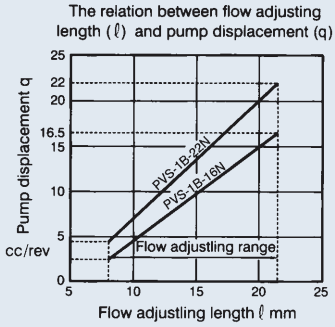

PVS-2B-35N, PVS-2B-45N

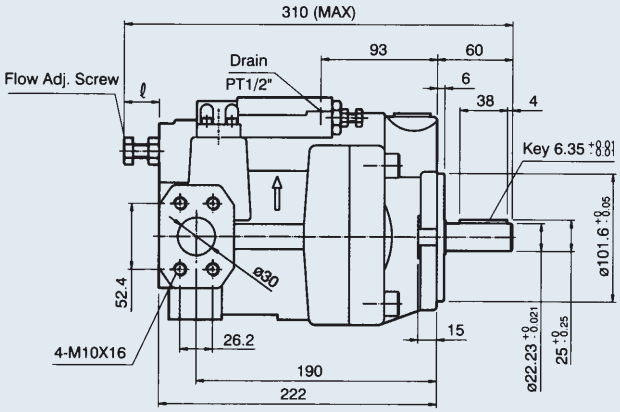

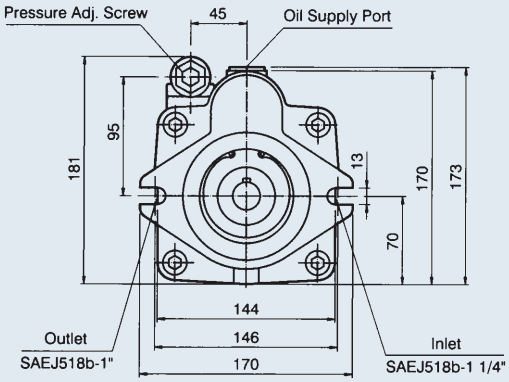

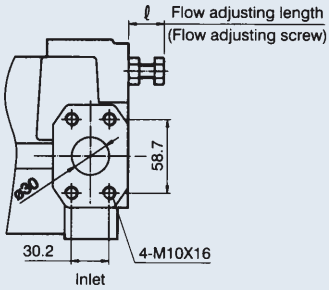

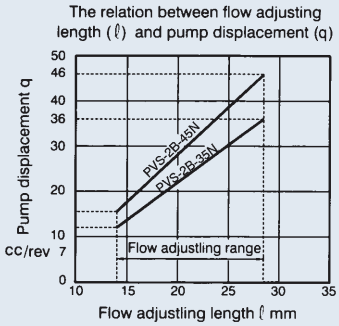

B

PVS, PZS SERIES VARIABLE VOLUME PISTON PUMP

Dimensions

PZS-3B-70N

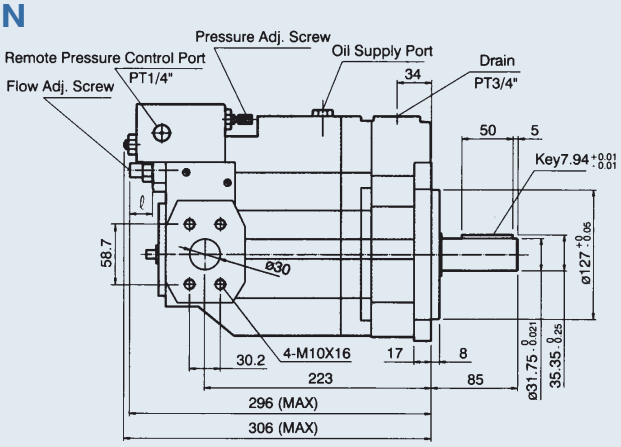

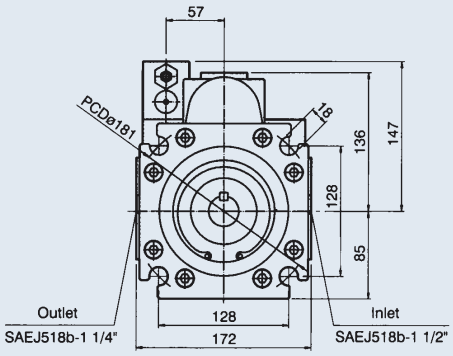

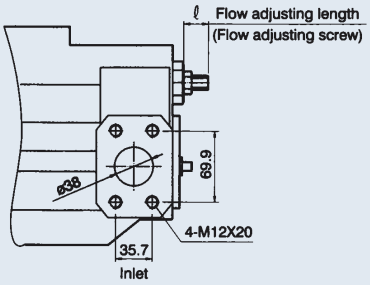

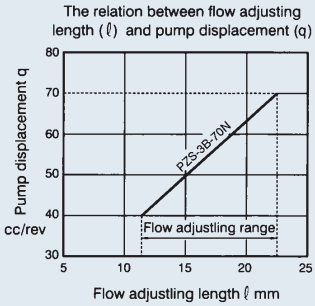

PZS-4B-100N

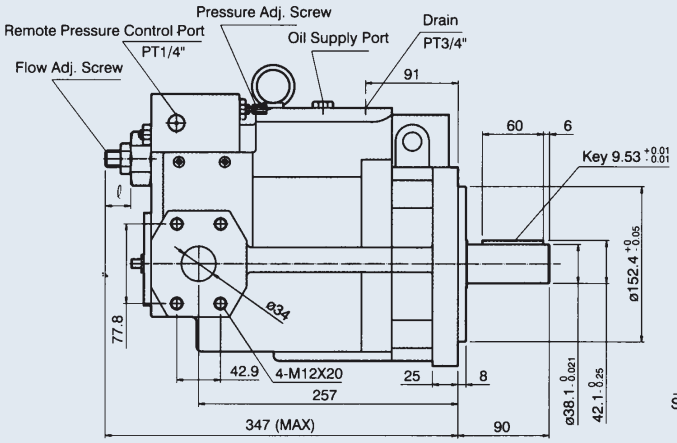

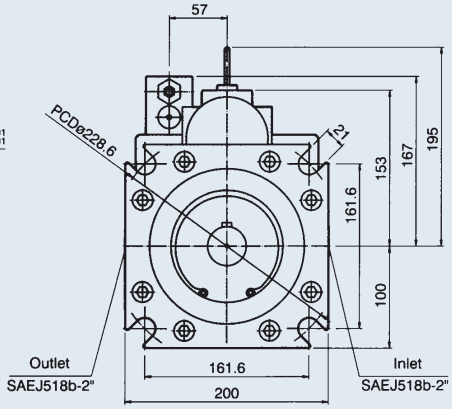

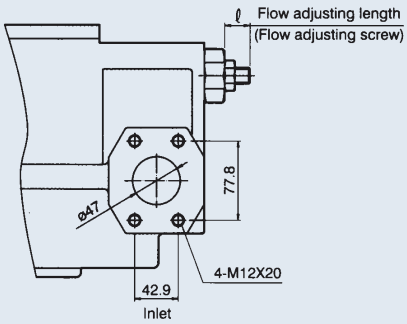

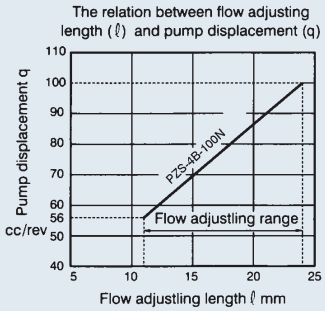

PVS, PZS SERIES VARIABLE VOLUME PISTON PUMP

Cross section drawing

PVS-0B-08

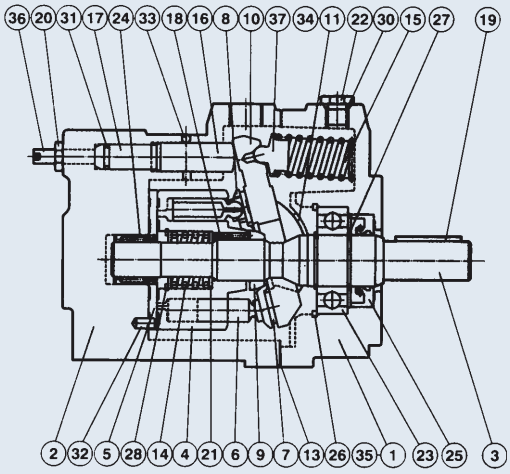

PVS-1B-16/22
PVS-2B-35/45

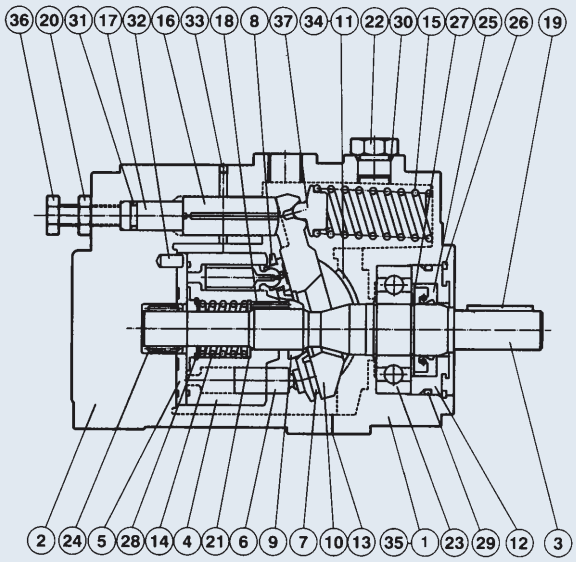

PVS-3B-70
PVS-4B-100

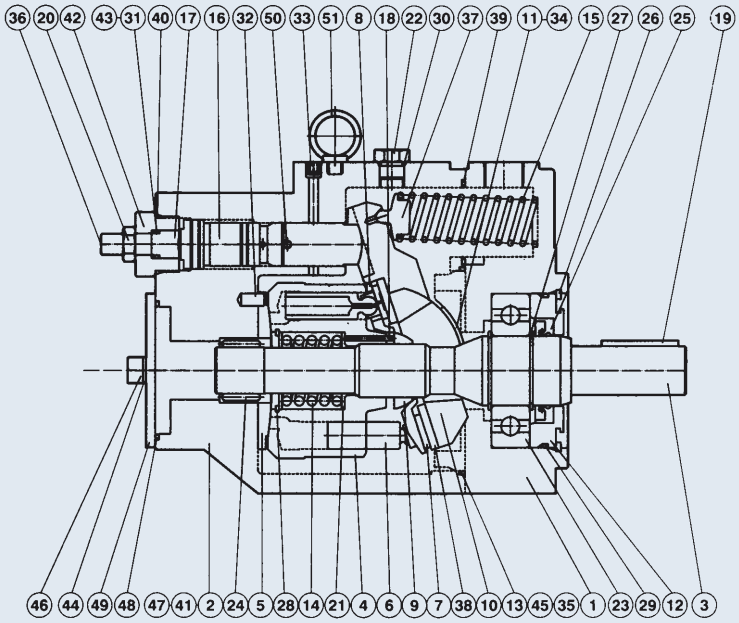

Parts list

NO.	Part Name	NO.	Part Name	NO.	Part Name	NO.	Part Name	NO.	Part Name
1	Bady	9	Barrel holder	17	Guide	25	Oil seal	33	Expander plug
2	Case	10	Swash plate	18	Needle	26	Snap ring	34	Machine screw
3	Shaft	11	Thrust bush	19	Key	27	Snap ring	35	Machine screw
4	Cylinder barrel	12	Seal holder	20	Nut	28	Snap ring	36	Flow adj. screw
5	Valve plate	13	Gasket	21	Retainer	29	O-ring	37	Spring Holder
6	Piston	14	Spring	22	Plug	30	O-ring		
7	Shoe	15	Spring	23	Ball bearing	31	O-ring		
8	Shoe holder	16	Control Piston	24	Needle bearing	32	Pin		